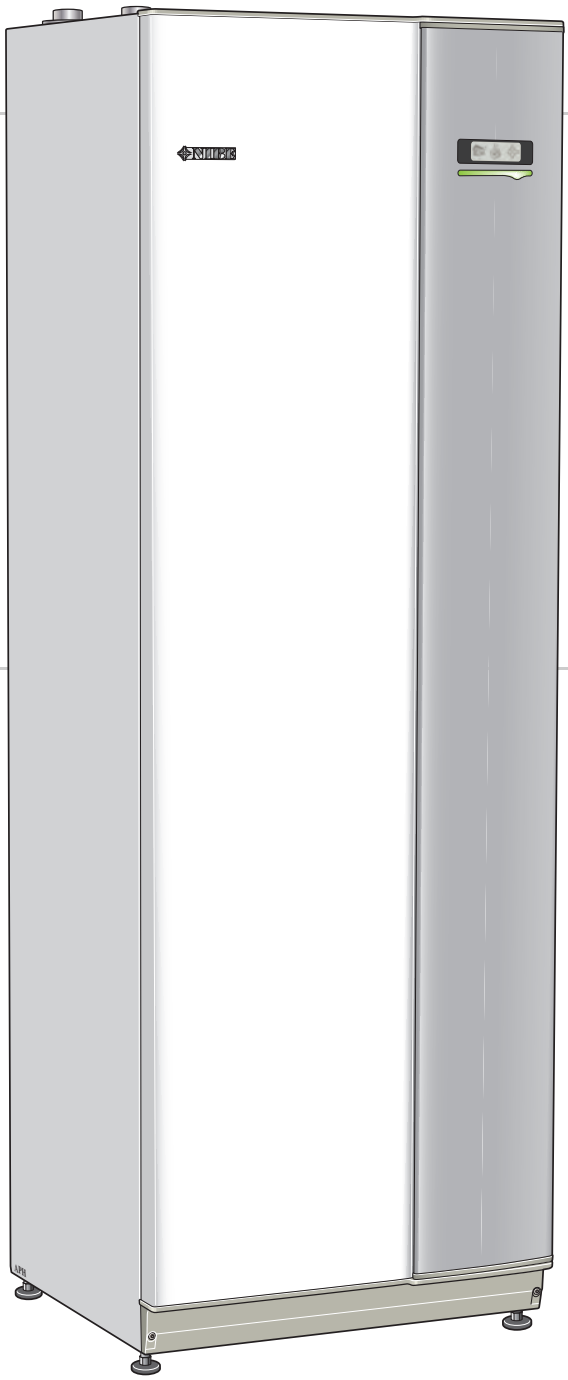

Installer manual

NIBE™ VVM 320

Indoor module

IHB GB 1613-5
231357

Quick guide

Navigation

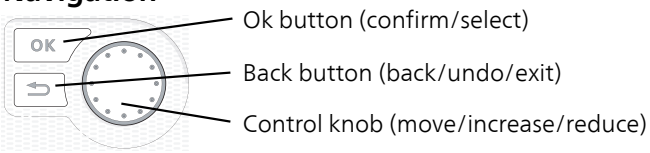

A detailed explanation of the button functions can be found on page 40.

How to scroll through menus and make different settings is described on page 41.

Set the indoor climate

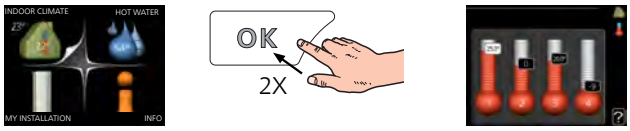

The mode for setting the indoor temperature is accessed by pressing the OK button twice, when in the start mode in the main menu.

Increase hot water volume

To temporarily increase the amount of hot water, first turn the control knob to mark menu 2 (water droplet) and then press the OK button twice.

In event of disturbances in comfort

If a disturbance in comfort of any type occurs there are some measures that can be taken before you need to contact your installer. See page 59 for instructions.

Table of Contents

1 Important information

Safety information

This manual describes installation and service procedures for implementation by specialists.

This appliance can be used by children aged from 8 years and above and persons with reduced physical, sensory or mental capabilities or lack of experience and knowledge if they have been given supervision or instruction concerning use of the appliance in a safe way and understand the hazards involved. Children shall not play with the appliance. Cleaning and user maintenance shall not be made by children without supervision.

Rights to make any design or technical modifications are reserved.

©NIBE 2016.

Symbols

NOTE
This symbol indicates danger to machine or person.

Caution
This symbol indicates important information about what you should observe when maintaining your installation.

TIP
This symbol indicates tips on how to facilitate using the product.

Marking

VVM 320 is CE marked and fulfils IP21.

The CE marking means that NIBE ensures that the product meets all regulations that are placed on it based on relevant EU directives. The CE mark is obligatory for most products sold in the EU, regardless where they are made.

IP21 means that objects with a diameter larger than or equivalent to 12.5 mm cannot penetrate and cause damage and that the product is protected against vertically falling drops of water.

Serial number

The serial number can be found to the left, on top of VVM 320.

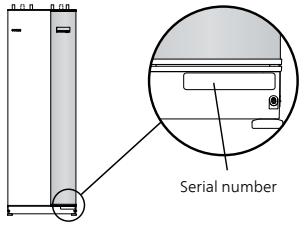

Caution
Always give the product's serial number (14 digits) when contacting your installer.

Recovery

Leave the disposal of the packaging to the installer who installed the product or to special waste stations.

Do not dispose of used products with normal household waste. It must be disposed of at a special waste station or dealer who provides this type of service.

Improper disposal of the product by the user results in administrative penalties in accordance with current legislation.

Country specific information

Installer manual

This installer manual must be left with the customer.

Inspection of the installation

Current regulations require the heating installation to be inspected before it is commissioned. The inspection must be carried out by a suitably qualified person. Fill in the page for information about installation data in the User manual.

✔	Description	Notes	Signature	Date
Heating medium (page 17)				
	System flushed			
	System vented			
	Expansion vessel			
	Particle filter			
	Safety valve			
	Shut off valves			
	Boiler pressure			
	Connected according to outline diagram			
Hot water (page 17)				
	Shut off valves			
	Mixing valve			
	Safety valve			
Electricity (page 23)				
	Connected communication			
	Circuit fuses			
	Fuses, indoor module			
	Fuses property			
	Outside sensor			
	Room sensor			
	Current sensor			
	Safety breaker			
	Earth circuit-breaker			
	Setting of emergency mode thermostat			
Miscellaneous				
	Docked to			

Contact information

AT **KNV Energietechnik GmbH**, Gahberggasse 11, 4861 Schörfling

Tel: +43 (0)7662 8963-0 Fax: +43 (0)7662 8963-44 E-mail: mail@knv.at www.knv.at

CH **NIBE Wärmetechnik c/o ait Schweiz AG**, Industriepark, CH-6246 Altishofen

Tel: (52) 647 00 30 Fax: (52) 647 00 31 E-mail: info@nibe.ch www.nibe.ch

CZ **Druzstevni zavody Drazice s.r.o**, Drazice 69, CZ - 294 71 Benatky nad Jizerou

Tel: +420 326 373 801 Fax: +420 326 373 803 E-mail: nibe@nibe.cz www.nibe.cz

DE **NIBE Systemtechnik GmbH**, Am Reiherpfahl 3, 29223 Celle

Tel: 05141/7546-0 Fax: 05141/7546-99 E-mail: info@nibe.de www.nibe.de

DK **Vølund Varmeteknik A/S**, Member of the Nibe Group, Brogårdsvej 7, 6920 Videbæk

Tel: 97 17 20 33 Fax: 97 17 29 33 E-mail: info@volundvt.dk www.volundvt.dk

FI **NIBE Energy Systems OY**, Juurakkotie 3, 01510 Vantaa

Puh: 09-274 697 0 Fax: 09-274 697 40 E-mail: info@nibe.fi www.nibe.fi

FR **NIBE Energy Systems France Sarl,** Zone industrielle RD 28, Rue du Pou du Ciel, 01600 Reyrieux

Tel : 04 74 00 92 92 Fax : 04 74 00 42 00 E-mail: info@nibe.fr www.nibe.fr

GB **NIBE Energy Systems Ltd**, 3C Broom Business Park, Bridge Way, Chesterfield S41 9QG

Tel: 0845 095 1200 Fax: 0845 095 1201 E-mail: info@nibe.co.uk www.nibe.co.uk

NL **NIBE Energietechniek B.V.**, Postbus 634, NL 4900 AP Oosterhout

Tel: 0168 477722 Fax: 0168 476998 E-mail: info@nibenl.nl www.nibenl.nl

NO **ABK AS**, Brobekkveien 80, 0582 Oslo, Postadresse: Postboks 64 Vollebekk, 0516 Oslo

Tel. sentralbord: +47 23 17 05 20 E-mail: post@abkklima.no www.nibeenergysystems.no

PL **NIBE-BIAWAR Sp. z o. o.** Aleja Jana Pawła II 57, 15-703 BIAŁYSTOK

Tel: 085 662 84 90 Fax: 085 662 84 14 E-mail: sekretariat@biawar.com.pl www.biawar.com.pl

RU © **"EVAN"** 17, per. Boynovskiy, Nizhny Novgorod

Tel./fax +7 831 419 57 06 E-mail: info@evan.ru www.nibe-evan.ru

SE **NIBE AB Sweden**, Box 14, Hannabadsvägen 5, SE-285 21 Markaryd

Tel: +46-(0)433-73 000 Fax: +46-(0)433-73 190 E-mail: info@nibe.se www.nibe.se

For countries not mention in this list, please contact Nibe Sweden or check www.nibe.eu for more information.

2 Delivery and handling

Transport

VVM 320 should be transported and stored vertically in a dry place. However, the VVM 320 may be carefully laid on its back when being moved into a building.

Assembly

- Position VVM 320 on a solid foundation that tolerates water and the weight of the heat pump. Use the product's adjustable feet to obtain a horizontal and stable set-up.

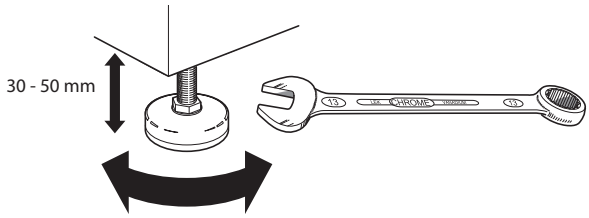

- Because water comes from VVM 320, the area where the heating pump is located must be equipped with floor drainage.

Installation area

Leave a free space of 800 mm in front of the product. All service on VVM 320 can be carried out from the front.

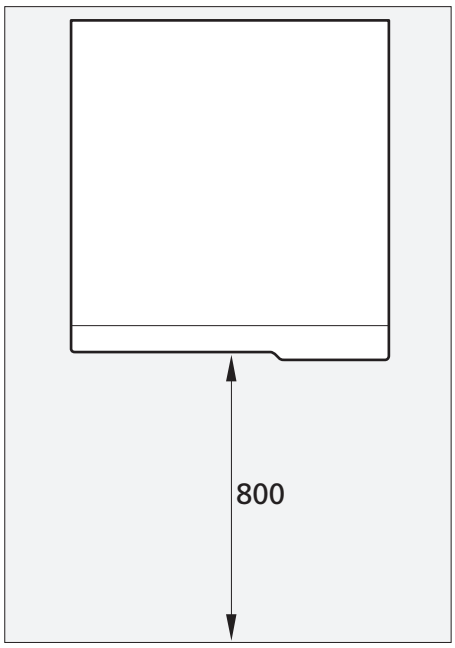

NOTE

Leave 10 – 25 mm free space between the indoor module and the wall behind for routing of cables and pipes.

Supplied components

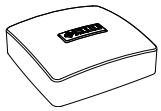

Outside sensor

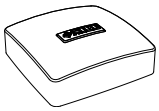

Room sensor

Current sensor*
*Only to 3X400V

Location

The kit of supplied items is placed on top of the product.

Removing the covers

Front cover

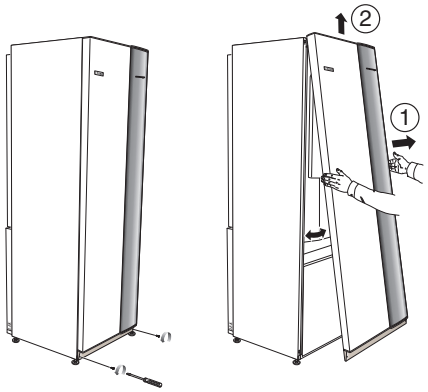

1. Remove the screws from the lower edge of the front cover.
2. Lift the cover out at the bottom edge and up.

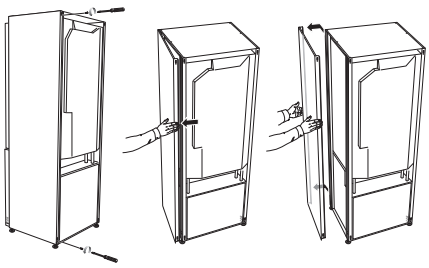

The side covers can be removed to facilitate the installation.

> **NOTE**
> 50 mm space required to remove the side panels.

1. Remove the screws from the upper and lower edges.
2. Twist the cover slightly outward.
3. Move the hatch backwards and slightly to the side.
4. Pull the cover to one side.
5. Pull the hatch forwards.

3 Indoor module's design

VVM 320

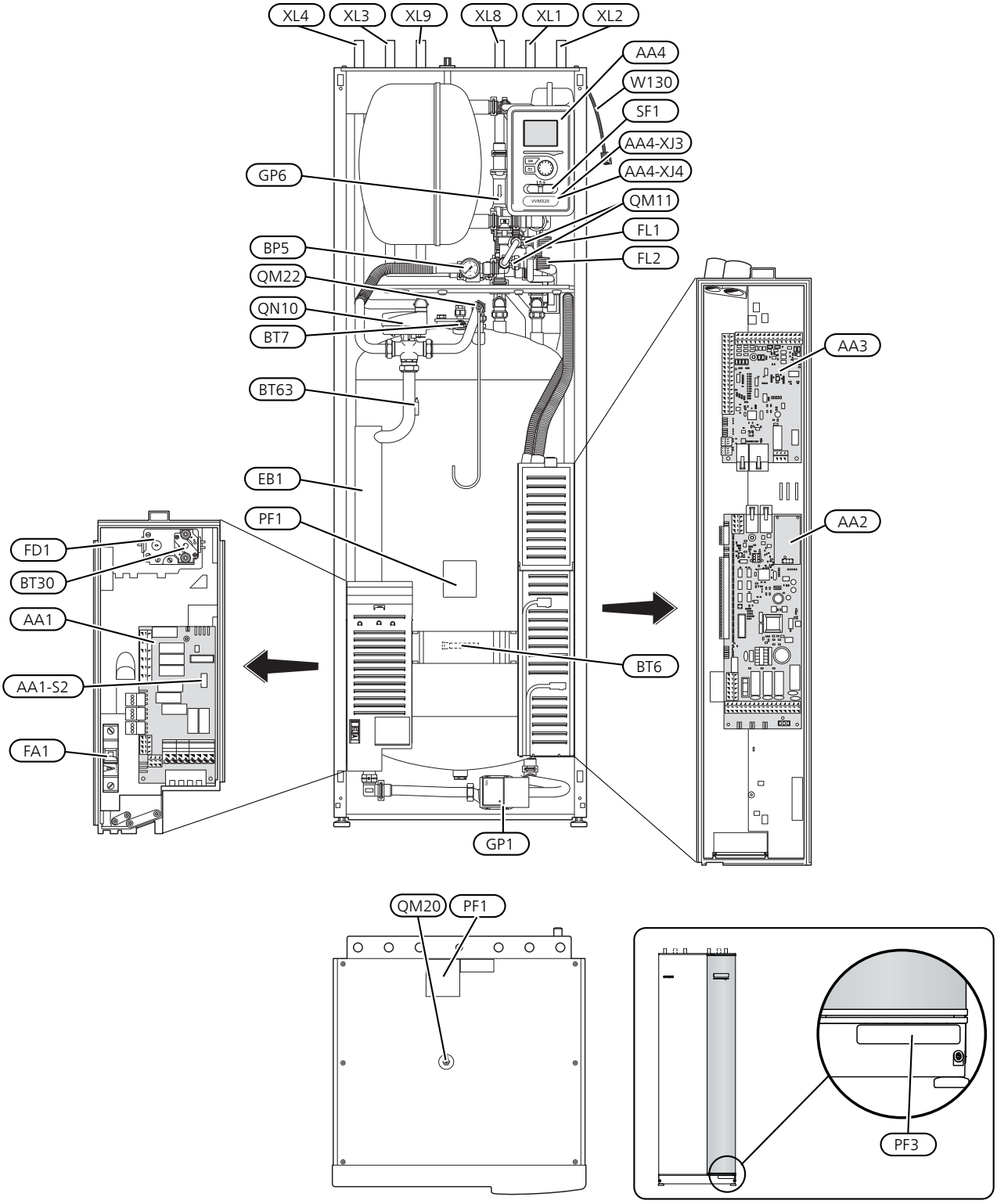

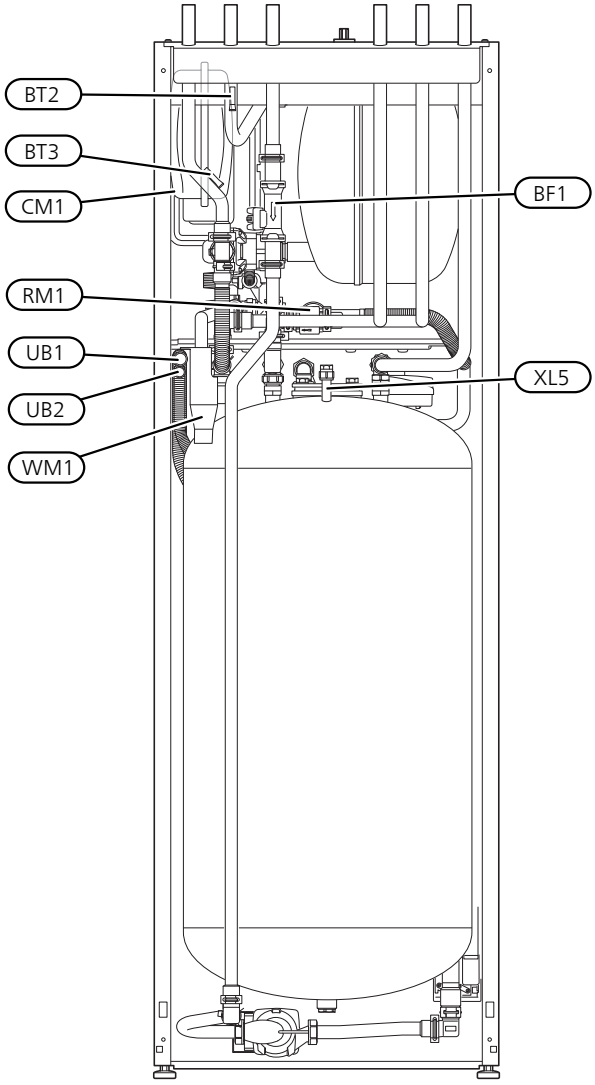

Pipe connections

XL1	Connection, heating medium supply line Ø22 mm
XL2	Connection, heating medium return line Ø22 mm
XL3	Connection, cold water Ø22 mm
XL4	Connection, hot water Ø22 mm
XL5	Connection, hot water circulation Ø15 mm (does not apply to copper)
XL8	Connection, docking from heat pump Ø22 mm
XL9	Connection, docking to heat pump Ø22 mm

HVAC components

CM1	Expansion vessel, closed, heating medium
FL1	Safety valve, water heater
FL2	Safety valve, heating medium
GP1	Circulation pump
GP6	Circulation pump, heating medium
QM20	Venting, climate system
QM22	Venting valve, coil
QN10	Reversing valve, climate system/water heating, flow line
QM11	Filler valve, heating medium
RM1 [1)]	Check valve, cold water
WM1	Tundish

Sensors etc.

BP5	Manometer, heating system
BT2	Temperature sensors, heating medium flow
BT3	Temperature sensors, heating medium return
BT6	Temperature sensor, hot water, charging
BT7	Temperature sensor, hot water, top
BT30	Thermostat, standby mode
BT63	Temperature sensor, heating medium supply after immersion heater

Electrical components

AA1	Immersion heater card
	AA1-S2 Switch (DIP switch) on circuit board
AA2	Base card
AA3	Input circuit board
AA4	Display unit
	AA4-XJ3 USB socket
	AA4-XJ4 Service socket
BF1 [2)]	Energy meter
EB1	Immersion heater
FA1	Miniature circuit-breaker
FD1	Temperature limiter
SF1	Switch
W130	Network cable for NIBE Uplink™

Miscellaneous

PF1	Rating plate
PF3	Serial number plate
UB1	Cable gland
UB2	Cable gland

Designations in component locations according to standard IEC 81346-1 and 81346-2.

1) Not Denmark and Germany.

2) Applies to VVM 320 R, VVM 320 3x230V R and VVM 320 E EM. Available as accessory EMK 300 for other markets.

4 Pipe connections

General pipe connections

Pipe installation must be carried out in accordance with current norms and directives.

VVM 320 together with air/water heat pumps F2030-7 / F2030-9 or F2040-8 / F2040-12, F2120-8 / F2120-12 / F2120-16 make up a complete installation for heating and hot water.

The system requires the radiator circuit to be designed for a low temperature heating medium. At lowest dimensioned outdoor temperature, the highest recommended temperatures are 55 °C on the supply line and 45 °C on the return line, but VVM 320 can handle up to 65 °C.

Overflow water from the safety valve goes via overflow cups to a drain so that hot water splashes cannot cause injury. The entire length of the overflow water pipe must be inclined to prevent water pockets and must also be frost proof.

NIBE recommends installing VVM 320 as close to the heat pump as possible for optimum comfort. For further information about the location of different components, see section "Installation alternatives" in this manual.

NOTE

Any high points in the climate system, must be equipped with air vents.

NOTE

The pipe systems need to be flushed out before the indoor module is connected so that any debris cannot damage component parts.

NOTE

Switch (SF1) must not be moved to "I" or "⚠" until VVM 320 has been filled with water. Otherwise the temperature limiter, thermostat and the immersion heater etc can be damaged.

Boiler and radiator volumes

VVM 320 is equipped with a pressure expansion vessel of 10 litres.

The pre-pressure of the pressure expansion vessel must be dimensioned according to the maximum height (H) between the vessel and the highest positioned radiator, see figure. A pre-pressure of 0.5 bar (5 mvp) means a maximum permitted height difference of 5 m.

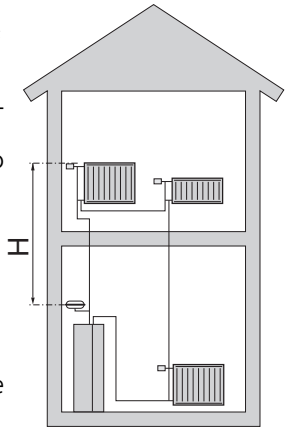

The maximum system volume excluding the boiler is 220 litres at the above pre-pressure.

System diagram

VVM 320 consists of water heater with charge coil, expansion vessel, safety valve, filler valve, immersion heater, circulation pumps, buffer vessel and control system. VVM 320 is connected to the climate system.

VVM 320 is designed for connection and communication with F2030 / F2040 / F2120, which together make up a complete heating installation.

When it is cold outdoors F2030 / F2040 / F2120 works with VVM 320 and if the outdoor air temperature falls below the heat pump stop temperature, all heating is carried out by VVM 320.

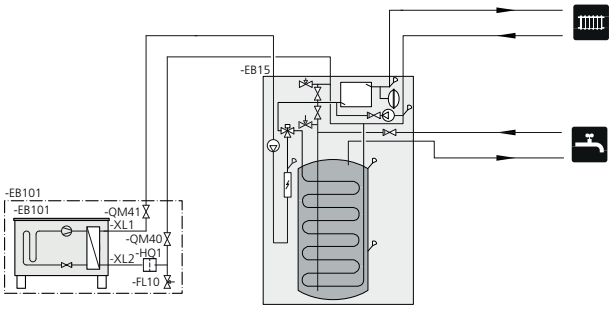

Symbol key

Symbol	Meaning
	Venting valve
	Shut-off valve
	Tapping valve
	Non-return valve
	Trim valve
	Shunt / shuttle valve
	Safety valve
	Thermometer
	Temperature sensor
	Expansion vessel
	Pressure gauge
	Circulation pump
	Particle filter
	Particle filter
	Fan
	Compressor
	Heat exchanger
	Radiator system
	Domestic hot water

Symbol	Meaning
	Under floor heating systems

Dimensions and pipe connections

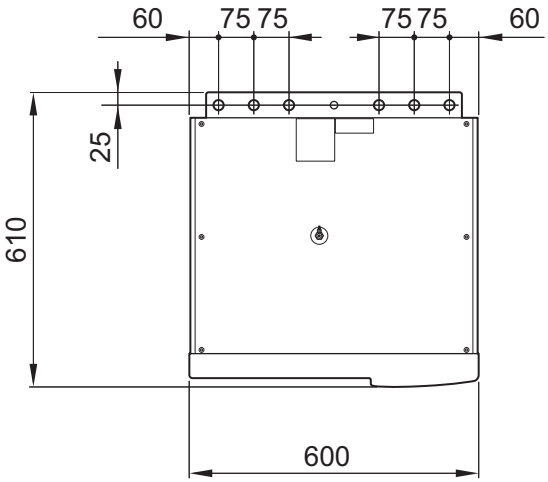

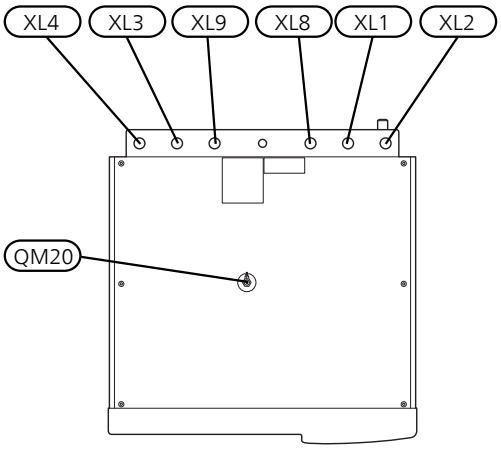

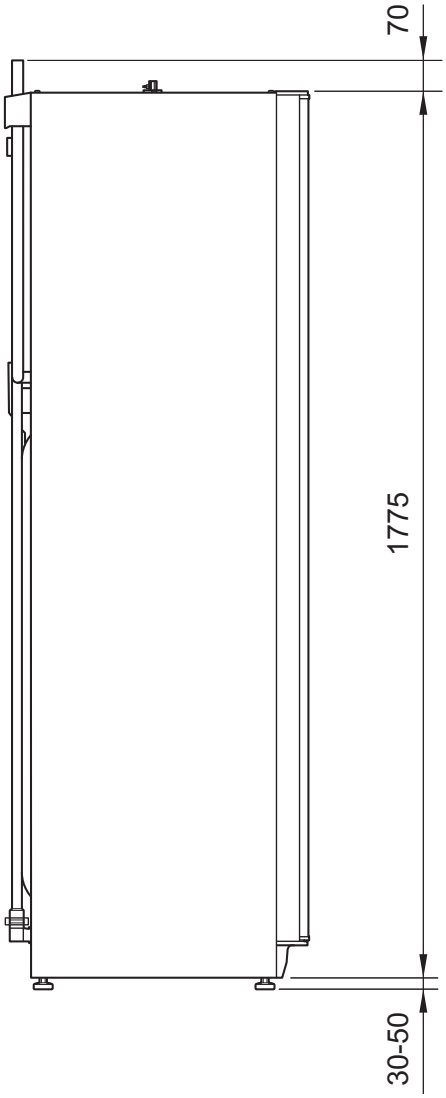

Pipe connections

XL1	Connection, heating medium supply line Ø22 mm
XL2	Connection, heating medium return line Ø22 mm
XL3	Connection, cold water Ø22 mm
XL4	Connection, hot water Ø22 mm
XL5	Connection, hot water circulation Ø15 mm (does not apply to copper)
XL8	Connection, docking in heating medium Ø22 mm
XL9	Connection, docking out heating medium Ø22 mm

Installation alternative

Compatible NIBE air/water heat pumps

Compatible NIBE air/water heat pumps must be equipped with a control card with display that has the software version given in the following list as a minimum. The control card version is displayed in the heat pump's display upon start-up.

Product	Software version
F2030-7	all versions
F2030-9	all versions
F2040-8	all versions
F2040-12	all versions
F2120-8	all versions
F2120-12	all versions
F2120-16	all versions

VVM 320 can be connected to extra water heater, see below.

Further option information is available at www.nibe.eu and in the respective assembly instructions for the accessories used. See page 61 for a list of the accessories that can be used with VVM 320.

The indoor module can be supplemented with an electric water heater, if a hot tub or other significant consumer of hot water is installed. A mixing valve is then installed on outgoing hot water from the heater.

Water heater with immersion heater

If the valve connector is to be installed externally, moved out or separated, it must be replaced with a separable connector Ø 22 mm.

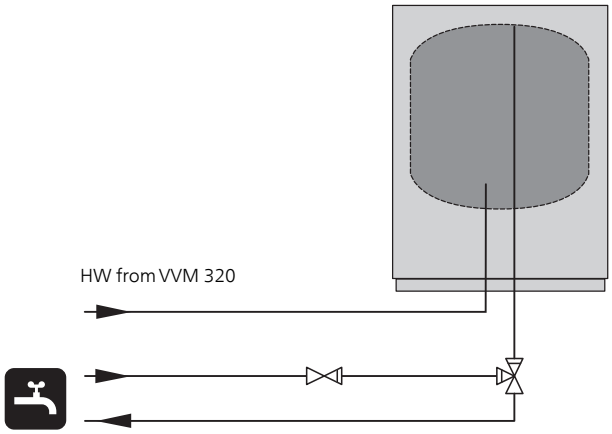

Explanation

AZ10	**Exhaust air heat pump F135**
HQ1	Particle filter
QM42	Shut-off valve
QM43	Shut-off valve
QM44	Shut-off valve
RM1	Non-return valve

CL11	**Pool package**
AA25	Unit box with accessory card
BT51	Temperature sensor, pool
EP5	Exchanger, pool
GP9	Pool, pump
GP12	Charge pump
HQ4	Particle filter
QN19	Three way valve, pool

EB15	**VVM 320**
BT25	Temperature sensor, heating medium, external supply
XL1	Connection, heating medium, flow 1
XL2	Connection, heating medium, return 1
XL3	Connection, cold water
XL4	Connection, hot water
XL8	Connection, docking, from heat pump
XL9	Connection, docking, to heat pump

EB101	**Heat pump**
FL10	Safety valve
HQ1	Particle filter
QM40	Shut-off valve
QM41	Shut-off valve

EM1	**External heat source** (Oil, gas, pellets or wood fired boiler with shunt valve)
AA25	Unit box with accessory card
BT52	Temperature sensor, boiler
CM1	Expansion vessel, closed
FL2	Safety valve, heating medium
KA1	Auxiliary relay
QN11	Shunt valve

EP21	**Climate system 2**
AA25	Unit box with accessory card
BT2	Temperature sensor, heating medium, flow
BT3	Temperature sensor, heating medium, return
GP20	Circulation pump, heating medium, lower shunt
QN25	Shunt valve

EQ1	**Active cooling module ACS 310**
AA25	Unit box with accessory card
BT64	Temperature sensor, cooling, supply line
CP10	Single jacket accumulator tank, cooling
GP12	Charge pump
GP13	Circulation pump, cooling
QN12	Three way valve cooling/heating

Hot water circulation	
BT82	Temperature sensor, hot water circulation return
EB2	Water heater
GP11	Circulation pump, hot water
RN1	Trim valve
RM1	Non-return valve

Miscel-laneous	
BF1	EMK 300
EB1	External electrical additional heat

1) Energy meter (BF1) is included in VVM 320 R, VVM 320 3x230V R and VVM 320 E EM. Available as accessory EMK 300 for other markets.

Outline diagram

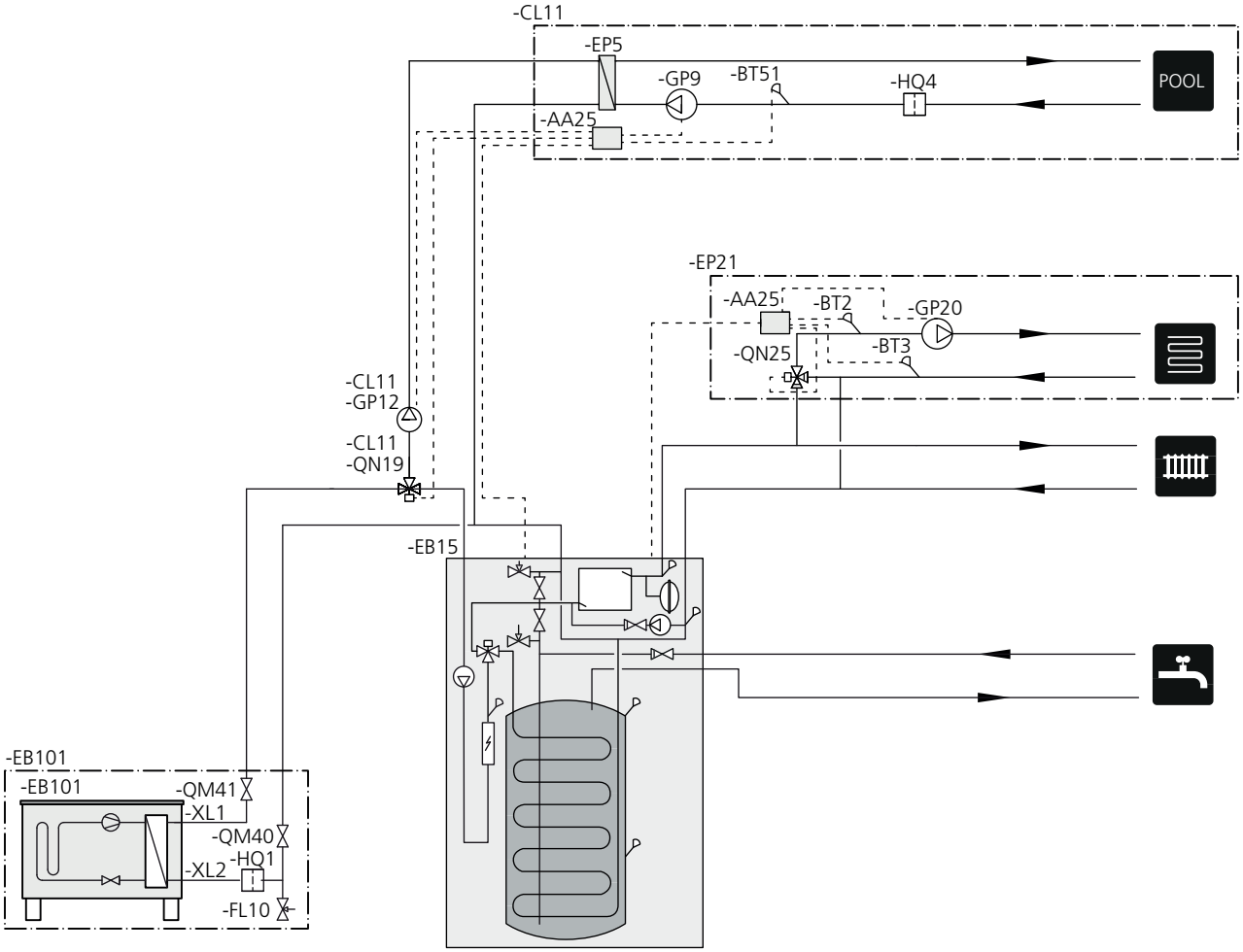

Connecting to heat pump

All outdoor pipes must be thermally insulated with at least 20 mm thick pipe insulation.

VVM 320 is not equipped with shut off valves; these must be installed outside the indoor module to facilitate any future servicing.

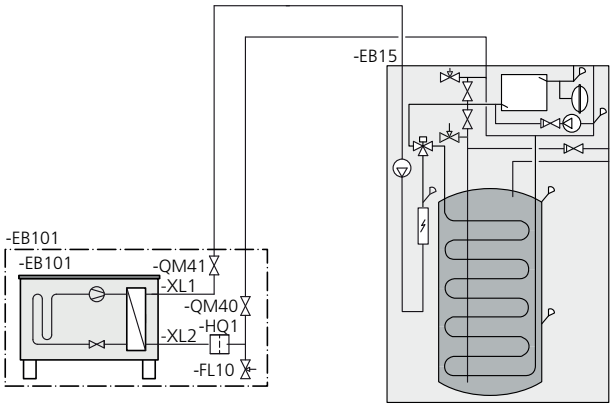

Connection during use without heat pump

Connect the pipe for docking in from the heat pump (XL8) with the pipe out to the heat pump XL9.

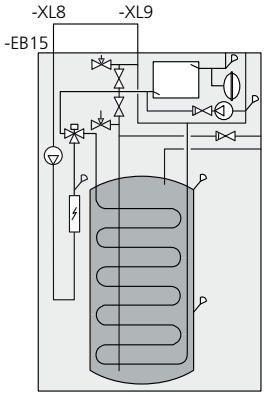

Connecting cold and hot water

The mixer valve must be installed if the factory setting is changed so that the temperature can exceed 60 °C. If the factory setting is changed, national regulations must be observed. The setting is made in menu 5.1.1 (See page 48).

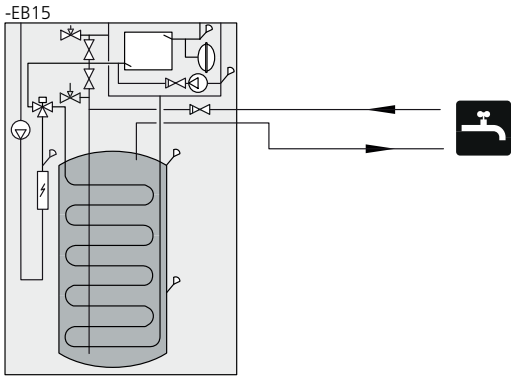

Connecting the climate system

When connecting to a system with thermostats on all radiators/underfloor heating coils, a relief valve must be fitted, or a thermostat must be removed to ensure sufficient flow.

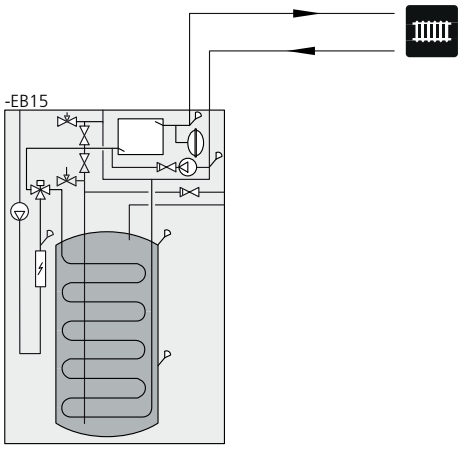

Two or more climate systems

When more than one climate system is to be heated, the following connection can be used.

The ECS 40/ECS 41. accessory is required for this connection.

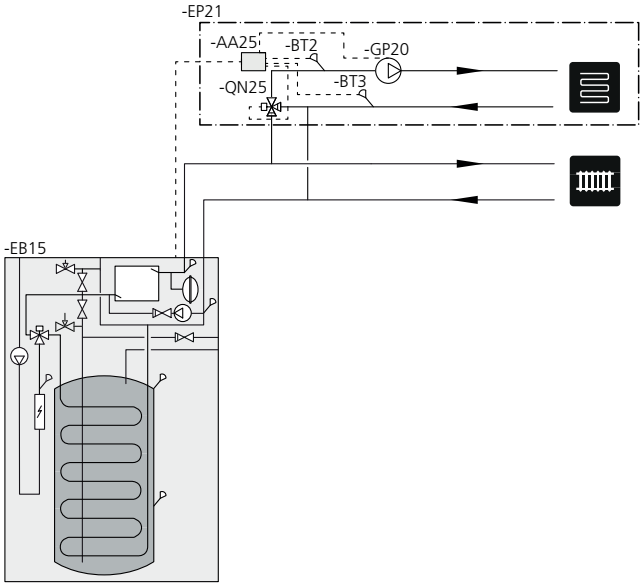

Connection of external heat source

For connection to a gas/electric/oil boiler, the AXC40 accessory is required, see "Accessories" on page 61.

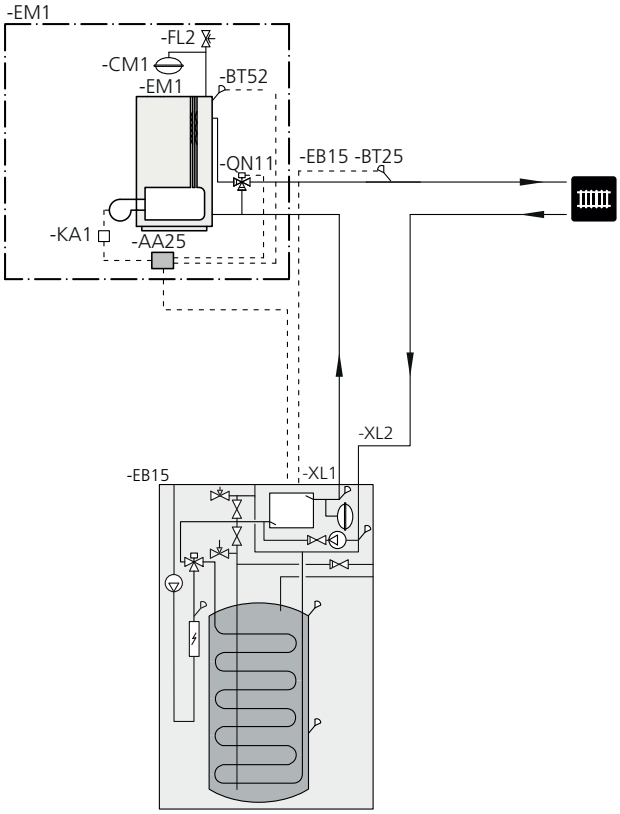

Connection of extra electrical addition

For connection of extra electrical addition, in one step, in event of a stoppage because of cold outdoor air. The electrical addition should not be greater than the heat pump's power, just before being stationary.

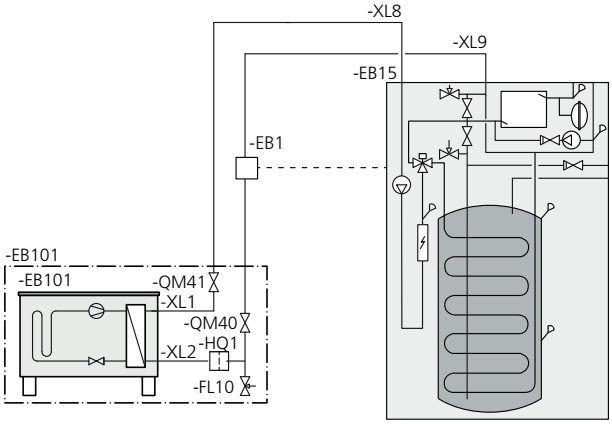

Connecting EMK 300

Installing energy measurement kit EMK 300 (BF1) to VVM 320.

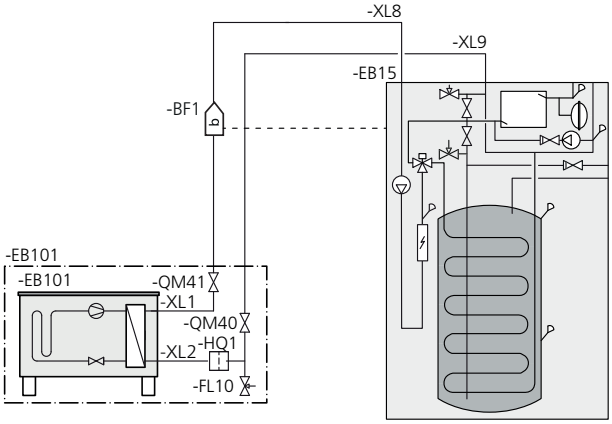

Connecting hot water circulation

To reduce the risk of bacterial growth in systems with hot water circulation, the temperature of the circulating water should not fall below 50 °C. There should not be any non-circulatory hot water pipes. Adjust the hot water system so that the temperature does not fall below 50 °C at the ends of the system.

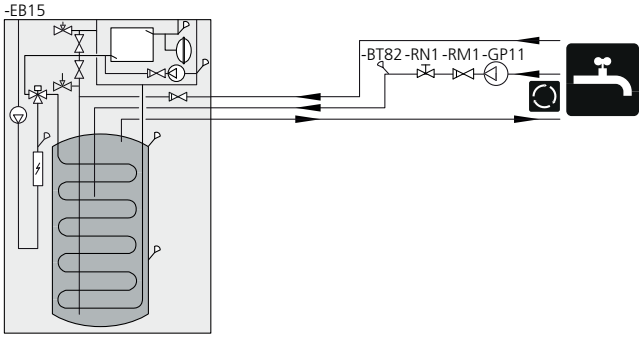

Connecting ACS 310

For connection of active cooling, ACS 310, see "Accessories" on page 61.

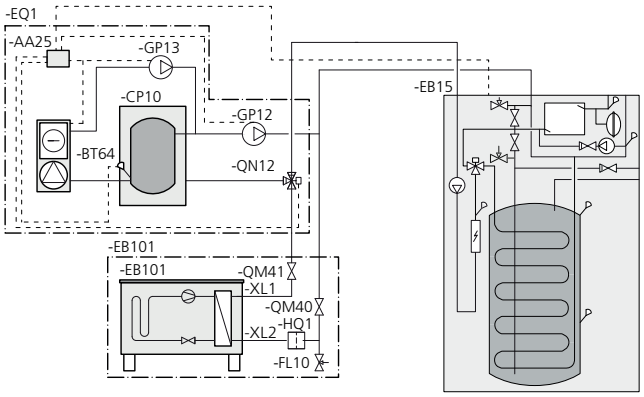

Connecting pool

Charging of the pool is controlled by the pool sensor. In the case of low pool temperatures, the reversing valve reverses direction and opens towards the pool exchanger. The POOL 310 accessory is required for this connection.

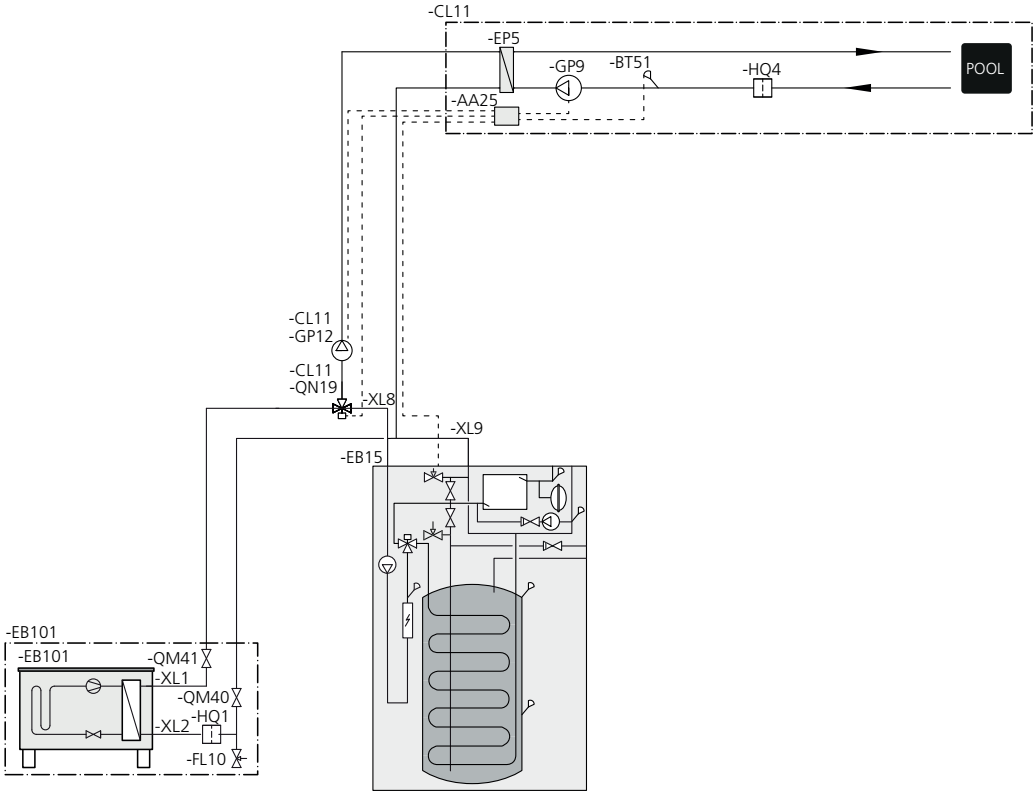

Connecting F135

The demand on F135 is controlled by the indoor module in the system. The pump and fan speed are also controlled from the menu in the indoor module.

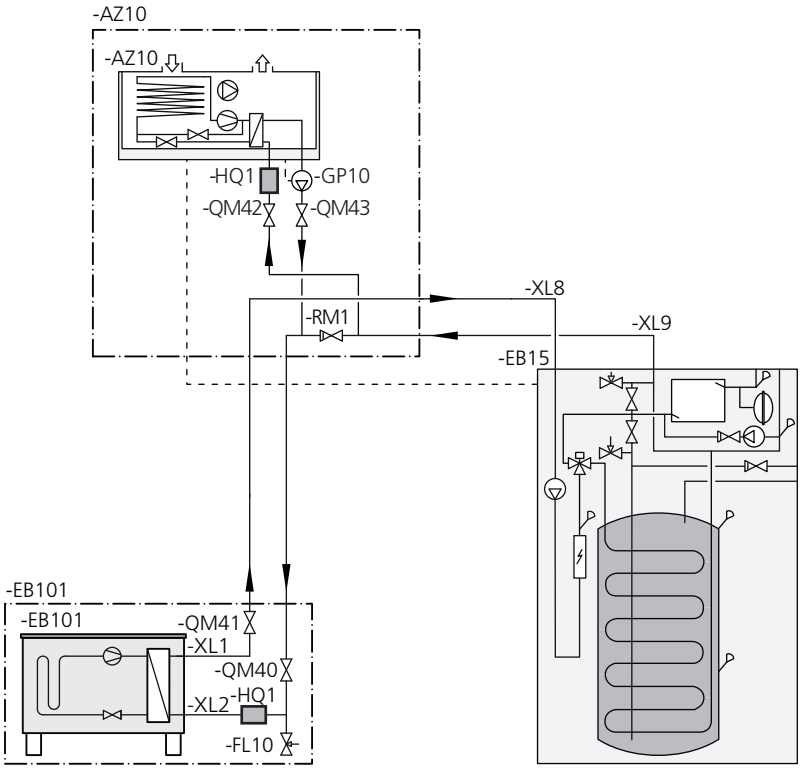

Connection of F135, ACS 310 and pool

F135 connected in air/water system with 4-pipe cooling. 4-pipe cooling must in this instance be connected between the outdoor air heat pump and F135. Where there is also a pool, F135 must be connected between 4-pipe cooling and pool. The demand on F135 is controlled by the indoor module in the system. The pump and fan speed are also controlled from the menu in the indoor module.

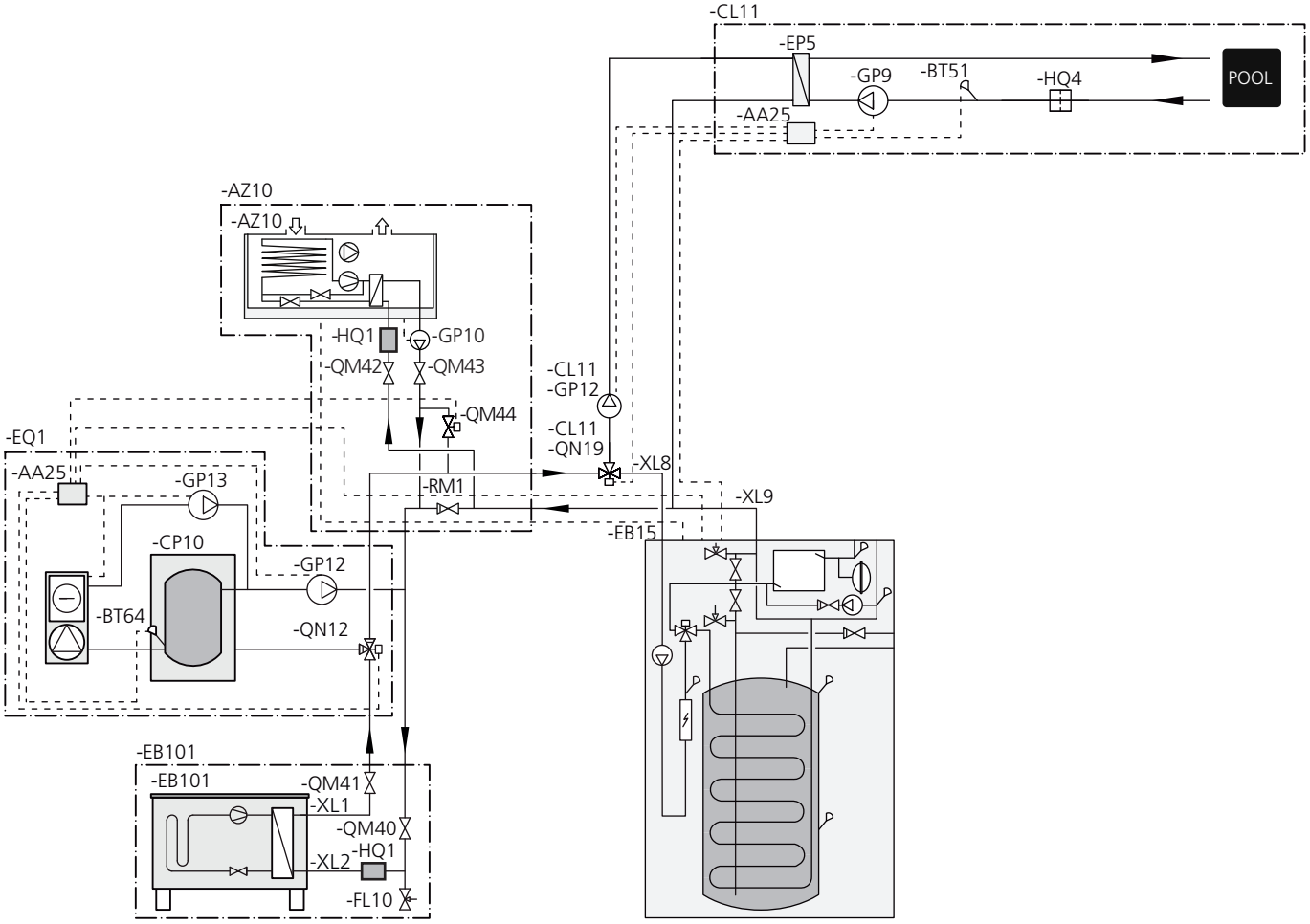

Connection of OPT 10 and gas boiler GBM 10-15

GBM 10-15 is connected to the supply line, between the indoor module and the air-water heat pump. To connect GBM 10-15, the accessory OPT 10 is required, see "Accessories" on page 61.

The indoor module controls the gas boiler's requested supply temperature via OPT 10. The gas boiler then regulates its own output to achieve the requested temperature.

In menu 4.1.8, you choose if you wish to use "smart energy source™". Here you can choose if the system is to use the energy source that is cheapest at the time. It is also possible to choose if the system is to use the energy source that is most CO_2 neutral at the time.

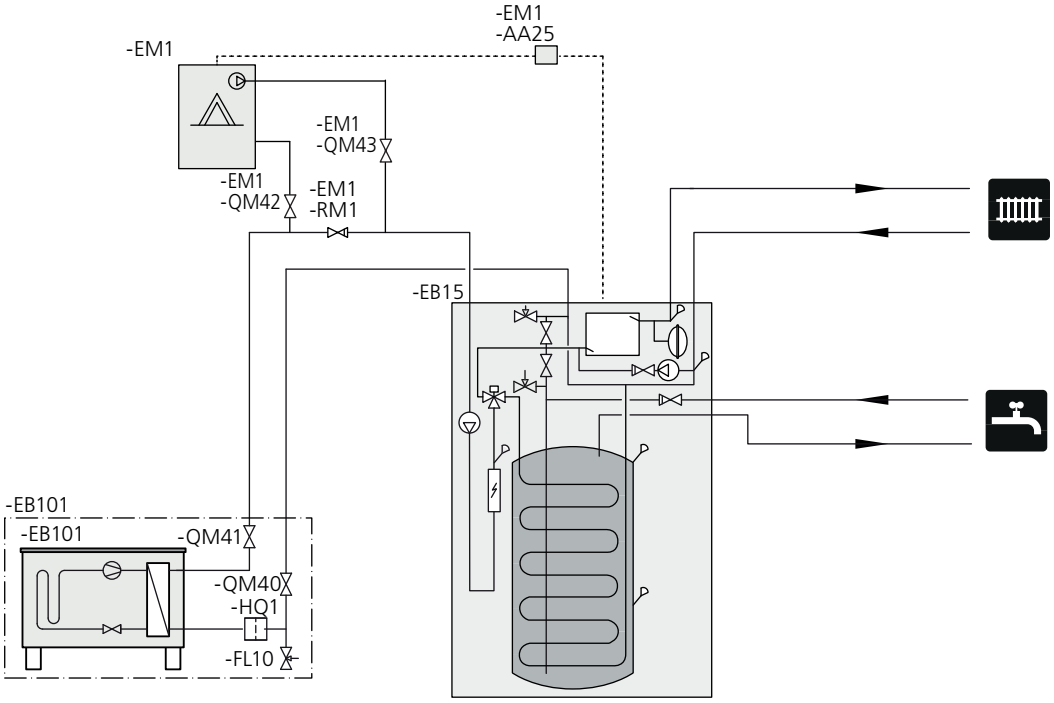

5 Electrical connections

General

All electrical equipment, except the outdoor sensors, room sensors and the current sensors are ready connected at the factory.

- Disconnect the indoor module before insulation testing the house wiring.
- If the building is equipped with an earth-fault breaker, VVM 320 should be equipped with a separate one.
- For the indoor module wiring diagram, see page 67.
- Communication and sensor cables to external connections must not be laid close to high current cables.
- The minimum area of communication and sensor cables to external connections must be 0.5 mm^2 up to 50, for example EKKX or LiYY or equivalent.
- When cable routing in VVM 320, cable grommets UB1and UB2, (marked in image) must be used. In UB1 and UB2, the cables are inserted through the indoor module from the back to the front.

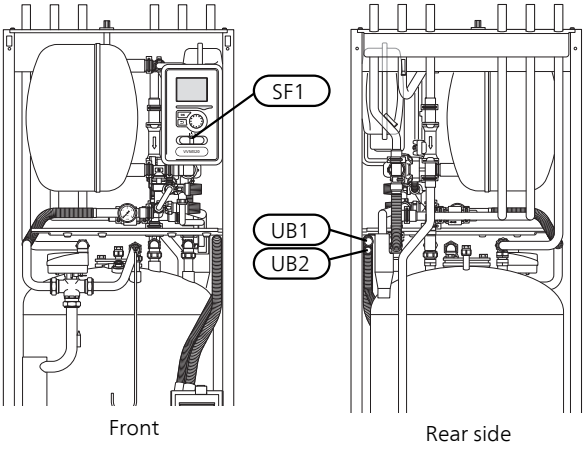

NOTE

The switch (SF1) must not be set to "I" or "⚠" until the boiler has been filled with water and the radiator system vented. Otherwise the temperature limiter, thermostat and the immersion heater can be damaged.

NOTE

If the supply cable is damaged, only NIBE, its service representative or similar authorised person may replace it to prevent any danger and damage.

NOTE

Electrical installation and service must be carried out under the supervision of a qualified electrician. Cut the current with the circuit breaker before carrying out any servicing. Electrical installation and wiring must be carried out in accordance with the stipulations in force.

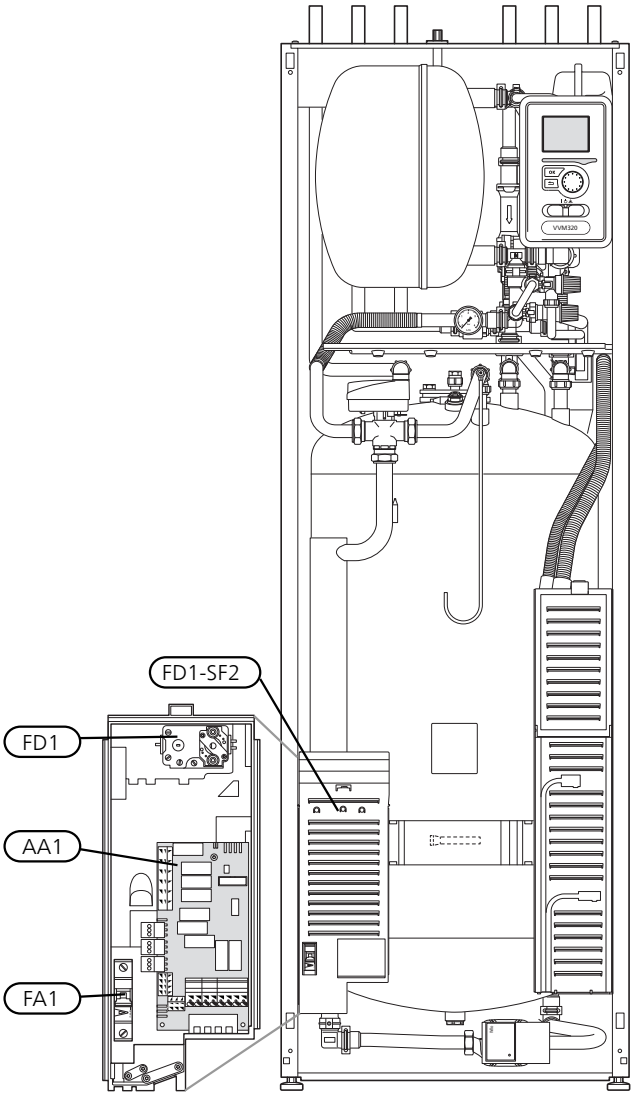

Miniature circuit-breaker

The indoor module and a large proportion of its internal components are internally fused by a miniature circuit breaker (FA1).

Temperature limiter

The temperature limiter (FD1) cuts the current supply to the electric additional heat, if the temperature rises to between 90 and 100 °C and can be reset manually.

Resetting

The temperature limiter (FD1) is accessible behind the front cover. Reset the temperature limiter by pressing the button (FD1-SF2) using a small screwdriver. Press the button lightly, max 15 N (approx. 1.5 kg).

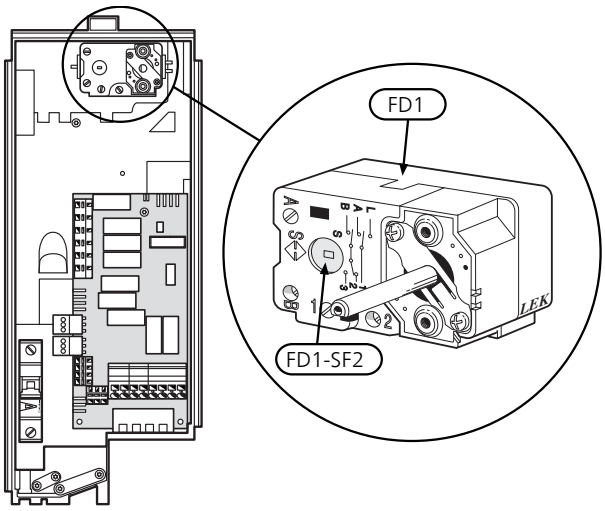

Accessibility, electrical connection

The plastic cap of the electrical boxes is opened using a screwdriver.

> **NOTE**
> The cover for the input card is opened without a tool.

Removing the cover, input circuit board

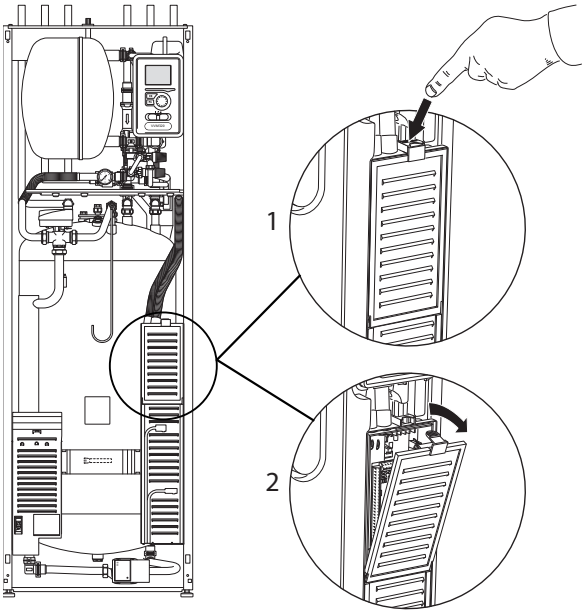

1. Push the catch down.
2. Angle out the cover and remove it.

Removing the cover, immersion heater circuit board

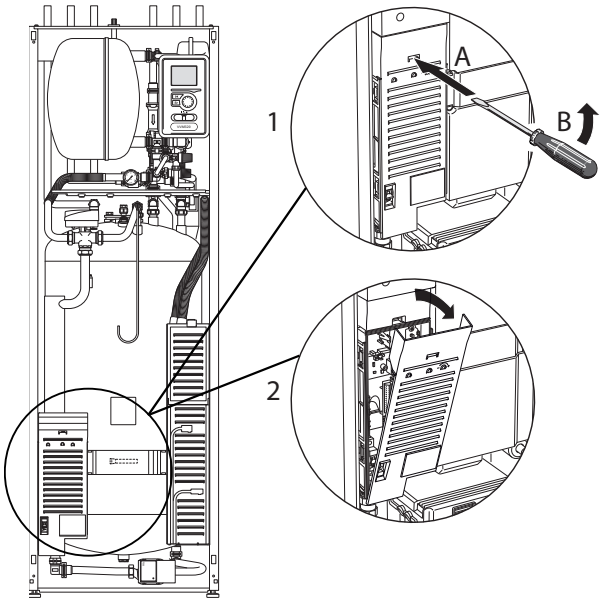

1. Insert the screwdriver (A) and pry the catch carefully downwards (B).
2. Angle out the cover and remove it.

Removing the cover, base board

> **Caution**
> To remove the cover for the base board, the cover for the input circuit board must first be removed.

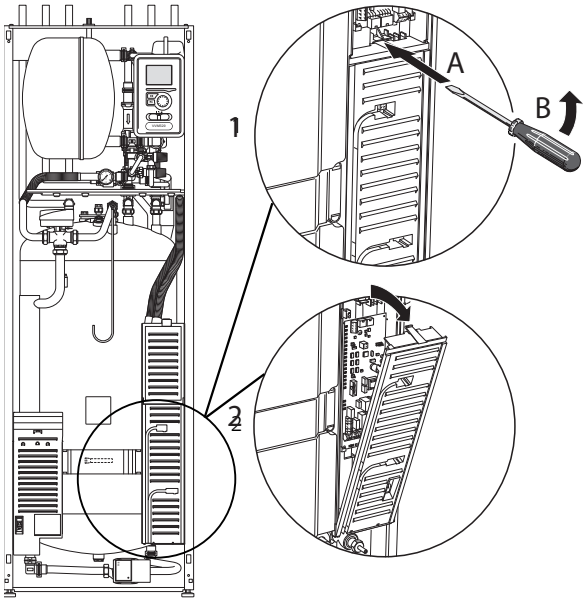

1. Insert the screwdriver (A) and pry the catch carefully downwards (B).
2. Angle out the cover and remove it.

Cable lock

Use a suitable tool to release/lock cables in the indoor module terminal blocks.

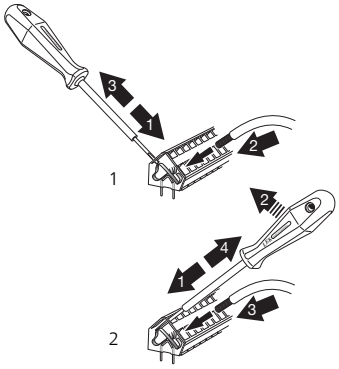

Connections

> **NOTE**
> To prevent interference, unscreened communication and/or sensor cables to external connections must not be laid closer than 20 cm from high voltage cables.

Power connection

VVM 320 must be installed via an isolator switch with a minimum breaking gap of 3mm. Minimum cable area must be sized according to the rating of the fuse used. The enclosed cable (length approx. 2 m) for incoming supply electricity is connected to terminal block X1 on the immersion heater board (AA1). The connection cable can be found on the reverse of VVM 320.

Connection

3x400V

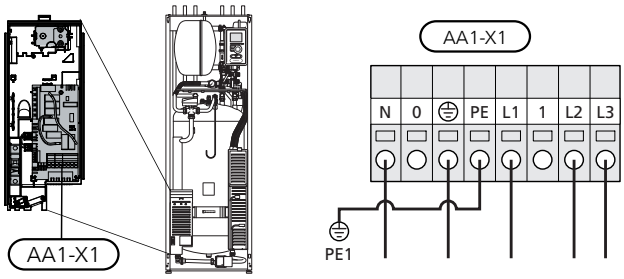

3x230V

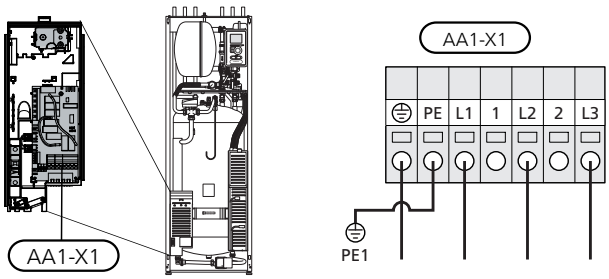

1x230V

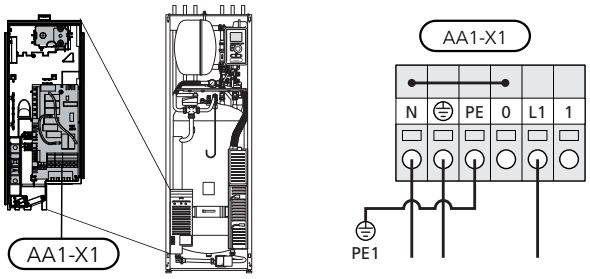

Tariff control

If the voltage to the immersion heater disappears during a certain period, there must also be blocking via the AU-input, see "Connection options- Possible selection for AU inputs".

Outside sensor

Install the outdoor temperature sensor (BT1) in the shade on a wall facing north or north-west, so it is unaffected by the morning sun for example.

Connect the sensor to terminal block X6:1 and X6:2 on the input board (AA3). Use a twin core cable of at least 0.5 mm² cable area.

If a conduit is used it must be sealed to prevent condensation in the sensor capsule.

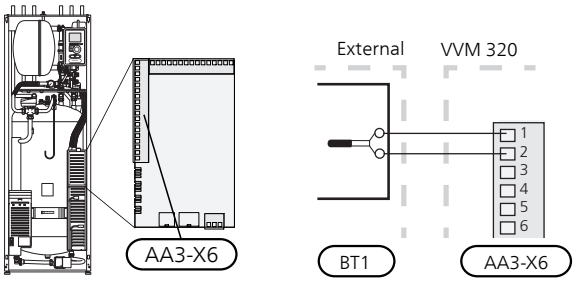

Room sensor

VVM 320 is supplied with a room sensor enclosed (BT50). The room sensor has up to three functions:

1. Show current room temperature in VVM 320's display.
2. Option of changing the room temperature in °C.
3. Makes it possible to change/stabilise the room temperature.

Install the sensor in a neutral position where the set temperature is required. A suitable location is on a free inner wall in a hall approx. 1.5 m above the floor. It is important that the sensor is not obstructed from measuring the correct room temperature by being located, for example, in a recess, between shelves, behind a curtain, above or close to a heat source, in a draft from an external door or in direct sunlight. Closed radiator thermostats can also cause problems.

The indoor module operates without the sensor, but if one wishes to read off the accommodation's indoor temperature in VVM 320's display, the sensor must be installed. Connect the room sensor to X6:3 and X6:4 on the input board (AA3).

If the sensor is to be used to change the room temperature in °C and/or to stabilise the room temperature, the sensor must be activated in menu 1.9.4.

If the room sensor is used in a room with underfloor heating, it should only have an indicatory function, not control of the room temperature.

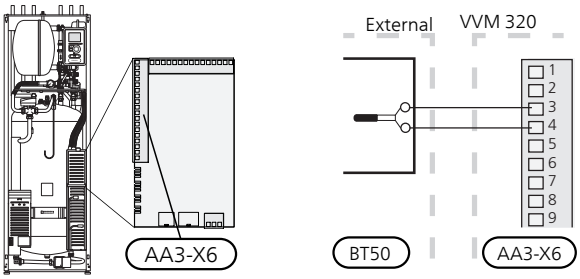

Caution

Changes of temperature in accommodation take time. For example, short time periods in combination with underfloor heating will not give a noticeable difference in room temperature.

Communication

If VVM 320 is to be connected to the heat pump, it is connected to terminal blocks X4:13, X4:14 and X4:15 on the input board (AA3).

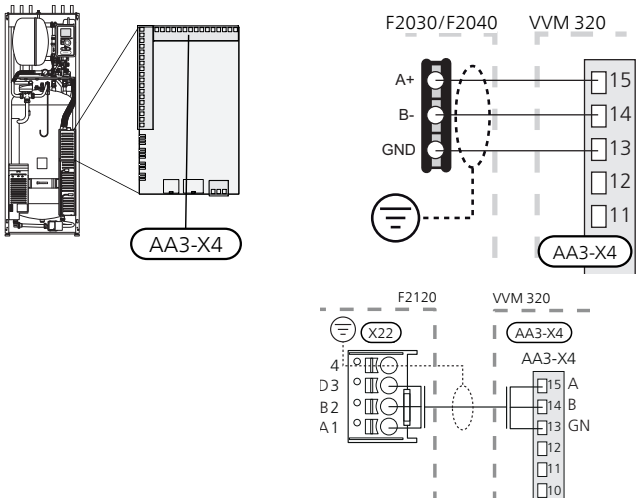

Settings

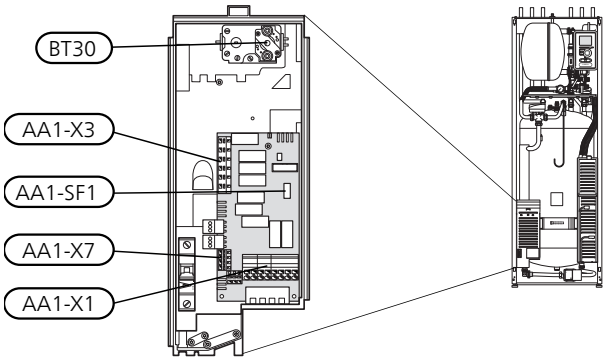

Electrical addition - maximum output

The immersion heater can be set to a maximum of 9 kW (3-phase) or 7 kW (1-phase). The settings on delivery are 9 kW (3-phase) or 7 kW (1-phase) .

The immersion heater output is divided into 7 steps, according to the table.

Setting maximum output in the electric additional heat is done in menu 5.1.12.

Power steps of the immersion heater

3x400V (maximum electrical output, connected upon delivery 9 kW)

Electrical addition (kW)	Max L1 (A)	Max L2 (A)	Max L3 (A)
0	0.0	0.0	0.0
2	0.0	8.7	0.0
3	0.0	7.5	7.5
4	0.0	8.7	8.7
5	8.7	7.5	7.5
6	8.7	8.7	8.7
7	8.7	7.5	15.7
9	8.7	15.7	15.7

3x400V (maximum electrical output, connected to 7 kW)

Electrical addition (kW)	Max L1 (A)	Max L2 (A)	Max L3 (A)
0	0.0	0.0	0.0
1	0.0	0.0	4.3
2	0.0	8.7	0.0
3	0.0	8.7	4.3
4	0.0	8.7	8.7
5	8.7	0.0	13
6	8.7	8.7	8.7
7	8.7	8.7	13

3x230V (maximum electrical output, connected upon delivery 9 kW)

Electrical addition (kW)	Max (A) L1	Max (A) L2	Max (A) L3
0	0.0	0.0	0.0
2	0.0	8.7	8.7
4	8.7	15.1	15.1
6	15.1	15.1	15.1
9	15.1	27.1	27.1

1x230V (maximum electrical output, connected upon delivery 7 kW)

Electrical addition (kW)	Max L1 (A)
0	0.0
1	4.3
2	8.7
3	13
4	17.4
5	21.7
6	26.1
7	30.4

The tables display the maximum phase current for the relevant electrical step for the indoor module.

If the current sensors are connected, the indoor module monitors the phase currents. In the event of a phase overload, the power is reconnected to another/other phases.

In the event of overload of the set fuse size, where the installed heat pump is frequency controlled, the immersion heater's power stage is first stepped out, then the compressor is restricted.

Emergency mode

When the indoor module is set to emergency mode (SF1 is set to ⚠) only the most necessary functions are activated.

- The hot water capacity is reduced.
- The load monitor is not connected.
- Fixed temperature in the flow line, see chapter Emergency mode thermostat on page 30.

Power in emergency mode

The immersion heater's output in emergency mode is set with the dip-switch (SF1) on the immersion heater board (AA1), according to the table below. Factory setting is 6 kW.

Power in emergency mode, 3x400V (maximum electrical output, connected to 7 kW)

kW	1	2	3	4	5	6
0	off	off	off	off	off	off
1	off	off	off	off	off	**on**
2	off	off	**on**	off	off	off
3	off	off	**on**	off	off	**on**
4	off	off	**on**	off	**on**	off
5	**on**	off	off	off	**on**	**on**
6	**on**	off	**on**	off	**on**	off
7	**on**	off	**on**	off	**on**	**on**

Power in emergency mode, 3x400V (maximum electrical output, connected upon delivery 9 kW)

kW	1	2	3	4	5	6
0	off	off	off	off	off	off
2	off	off	**on**	off	off	off
3	off	off	off	**on**	off	**on**
4	off	off	**on**	off	**on**	off
5	**on**	off	off	**on**	off	**on**
6	**on**	off	**on**	off	**on**	off
7	**on**	off	off	**on**	**on**	**on**
9	**on**	off	**on**	**on**	**on**	**on**

Power in emergency mode, 3x230V (maximum electrical output, connected upon delivery 9 kW)

kW	1	2	3	4	5	6
0	off	off	off	off	off	off
2	off	**on**	off	off	off	off
4	off	**on**	off	**on**	off	off
6	**on**	**on**	off	**on**	off	off
9	**on**	**on**	**on**	**on**	off	off

Power in emergency mode, 1x230V (maximum electrical output, connected upon delivery 7 kW)

kW	1	2	3	4	5	6
0	off	off	off	off	off	off
1	off	off	off	off	off	**on**
2	off	off	**on**	off	off	off
3	off	off	**on**	off	off	**on**
4	**on**	off	**on**	off	off	off
5	**on**	off	**on**	off	off	**on**
6	**on**	off	**on**	off	**on**	off
7	**on**	off	**on**	off	**on**	**on**

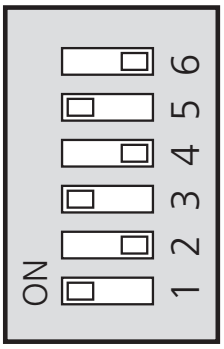

The image shows the dip-switch (AA1-SF1) in the factory setting for 3x400V, that is 6 kW.

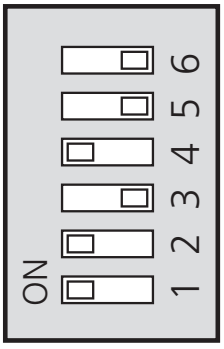

The image shows the dip-switch (AA1-SF1) in the factory setting for 3x230V, that is 6 kW.

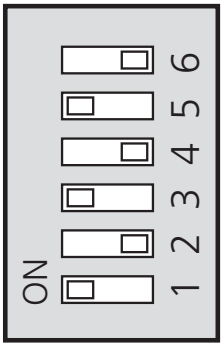

The image shows the dip-switch (AA1-SF1) in the factory setting for 1x230V, that is 6 kW.

Emergency mode thermostat

The supply temperature in emergency mode is set using a thermostat (FD1-BT30). It can be set to 35 (pre-set, for example under floor heating) or 45 °C (for example radiators).

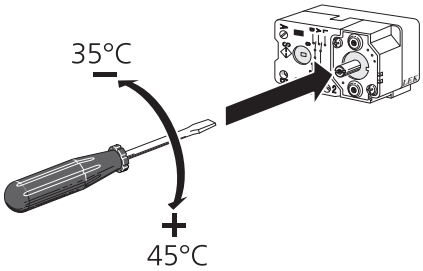

Output locking

VVM 320 follows applicable building regulations (BBR). This means that the maximum power output (maximum installed electrical output for heating) can be locked in menu 5.1.13. To then change the maximum power output, parts of the product must be replaced.

Optional connections

Load monitor

If the installed heat pump is frequency controlled, it will be limited when all power stages are disengaged.

External connection options

VVM 320 has software controlled inputs and outputs on the input board (AA3), for connecting the external switch function or sensor. This means that when an external switch function or sensor is connected to one of six special connections, the correct function must be selected to the correct connection in the software in VVM 320.

Caution

If an external switch function or sensor is connected to VVM 320, the function to use input or output must be selected in menu 5.4, see page 52.

Selectable inputs on the input board for these functions are AUX1 (X6:9-10), AUX2 (X6:11-12), AUX3 (X6:13-14), AUX4 (X6:15-16) and AUX5 (X6:17-18). Selectable outputs are AA3:X7.

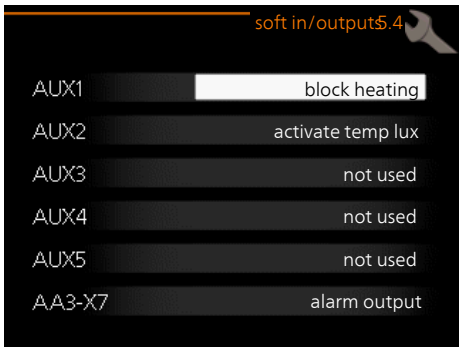

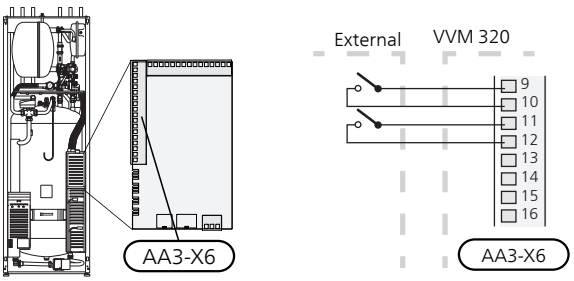

The example above uses the inputs AUX1 (X6:9-10) and AUX2 (X6:11-12) on the input board (AA3).

Caution

Some of the following functions can also be activated and scheduled via menu settings.

Possible selection for AUX inputs

Temperature sensor, cooling/heating

An extra temperature sensor can be connected to VVM 320 in order to determine when it is time to switch between heating and cooling operation.

Connect the temperature sensor to selected input (menu 5.4, the option only shows if the cooling accessory is installed, see page 52) on terminal block X6 on the input board (AA3) which is located behind the front cover and is to be placed in a suitable location in the climate system.

Use a 2 core cable of at least 0.5 mm2 cable area.

Switch for external blocking of addition and/or compressor

When external blocking of additional heat and/or compressor is wanted, this can be connected to terminal block X6 on the input board (AA3), which is positioned behind the front cover.

The additional heat and/or the compressor are disconnected by connecting a potential-free switch function to the input selected in menu 5.4, see page 52.

External blocking of addition and compressor can be combined.

A closed contact results in the electrical output being disconnected.

Contact for external tariff blocking

In those cases where external tariff blocking is used, it can be connected to terminal block X6 on the input board (AA3), which is positioned behind the front cover.

Tariff blocking means that the additional heat, the compressor, the heating and hot water are blocked by connecting a potential-free switch function to the input selected in menu 5.4, see page 52.

Closed switch means that tariff blocking is activated.

NOTE

When tariff blocking is activated, the min. supply line does not apply.

Switch for external blocking heating

In those cases where external blocking of heat is used, it can be connected to terminal block X6 on the input board (AA3), which is positioned behind the front cover.

Heating operation is disconnected by connecting a potential-free switch function to the input selected in menu 5.4, see page 52.

52

A closed switch results in blocked heating operation.

NOTE

When heat blocking is activated, the min. supply line does not apply.

Switch for external alarm (NC)

If "switch for external alarm (NC)" is selected as function on a soft input, infolarm 995 appears if the connected external circuit for selected soft input is **open**.

Switch for external alarm (NO)

If "switch for external alarm (NO)" is selected as function on a soft input, infolarm 995 appears if the connected external circuit for selected soft input is **closed**.

Contact for activation of "temporary lux"

An external switch function can be connected to VVM 320 for activation of the hot water function "temporary lux". The switch must be potential-free and connected to the selected input (menu 5.4, see page 52) on terminal block X6 on the input board (AA3).

"temporary lux" is activated for the time that the contact is connected.

Contact for activation of "external adjustment"

An external contact function can be connected to VVM 320 to change the supply temperature and the room temperature.

When the switch is closed the temperature changes in °C (if the room sensor is connected and activated). If a room sensor is not connected or activated, the desired change of "temperature" (heating curve offset) with the number of steps selected is set. The value is adjustable between -10 and +10.

- *climate system 1*

  The switch must be potential-free and connected to the selected input (menu 5.4, see page 52) on terminal block X6 on the input board (AA3).

  The value for the change is set in menu 1.9.2, "external adjustment".
- *climate system 2 to 8*

  External adjustment for climate systems 2 to 8 requires accessories (ECS 40 or ECS 41).

  See the accessory's installer handbook for installation instructions.

Switch for "SG ready"

> **NOTE**
>
> This function can only be used in mains networks that support the "SG Ready"-standard (Germany).
>
> "SG Ready" requires two AUX inputs.

In cases where this function is required it must be connected to terminal block 6 on the input board (3).

"SG Ready" is a smart form of tariff control, through which your electricity supplier can affect the indoor, hot water and/or pool temperatures (if applicable) or simply block the additional heat and/or compressor in the heat pump at certain times of the day (can be selected in menu 4.1.5 after the function is activated). Activate the function by connecting potential-free switch functions to two inputs selected in menu 5.4 (SG Ready A and SG Ready B), see page 52.

Closed or open switch means one of the following (A = SG Ready A and B = SG Ready B):

- **Blocking (A: Closed, B: Open)**

  "SG Ready" is active. The compressor in the heat pump and additional heat is blocked like the day's tariff blocking.
- **Normal mode (A: Open, B: Open)**

  "SG Ready" is not active. No effect on the system.
- **Low price mode (A: Open, B: Closed)**

  "SG Ready" is active. The system focuses on costs savings and can for example exploit a low tariff from the electricity supplier or over-capacity from any own power source (effect on the system can be adjusted in the menu 4.1.5).
- **Overcapacity mode (A: Closed, B: Closed)**

  "SG Ready" is active. The system is permitted to run at full capacity at over capacity with the electricity supplier (effect on the system is settable in menu 4.1.5).

Switch for +Adjust

Using +Adjust, the installation communicates with the underfloor heating's control centre* and adjusts the heat curve and calculated supply temperature according to the underfloor heating system's reconnection.

Activate the climate system you want +Adjust to affect by highlighting the function and pressing the OK button.

*Support for +Adjust required

> **NOTE**
>
> +Adjust must first be selected in menu 5.4 "soft inputs/outputs".

> **NOTE**
>
> Circuit board AA3 in the installation must have at least "Input version・ 34 and the software version must have "display version 5539 or later for +Adjust to work. The version can be checked in menu 3.1 under "input version" respectively "display version". New software can be downloaded for free from www.nibeuplink.com.

> **NOTE**
>
> In systems with both under floor heating and radiators, NIBE ECS 40/41 should be used for optimum operation.

Possible selection for AUX output (potential free variable relay)

It is possible to have an external connection through the relay function via a potential-free variable relay (max 2 A) on the input board (AA3), terminal block X7.

Optional functions for external connection:

- Indication of buzzer alarm.
- Cooling mode indication (only applies if accessories for cooling are present or if the heat pump has the integrated cooling function).
- Control of circulation pump for hot water circulation.
- External circulation pump (for heating medium).

- Addition in series on the charge circuit.

If any of the above is installed to terminal block X7 it must be selected in menu 5.4, see page 52.

The common alarm is preselected at the factory.

NOTE

An accessory board is required, if several functions are connected to terminal block X7 at the same time the common alarm is activated (see page 61).

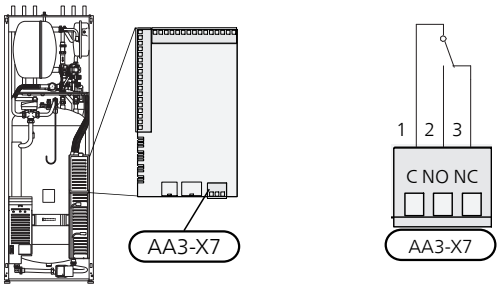

The picture shows the relay in the alarm position.

When switch (SF1) is in the "⏻" or "⚠" position the relay is in the alarm position.

External circulation pump or hot water circulation pump connected to the buzzer alarm relay as illustrated below.

NOTE

Mark up any junction boxes with warnings for external voltage.

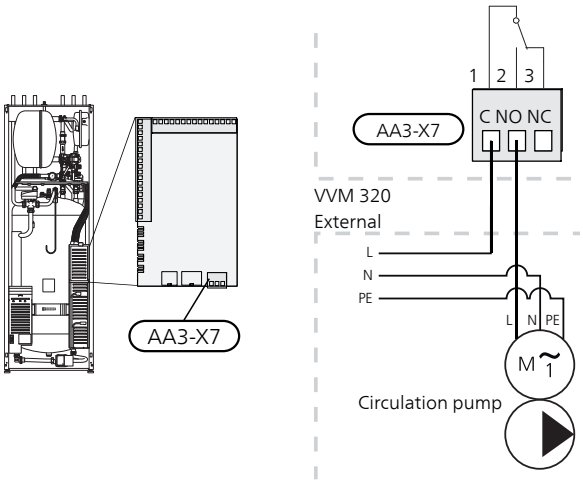

Caution

The relay outputs can have a max load of 2 A (230V AC).

Connecting accessories

Instructions for connecting accessories are provided in the manual accompanying the accessory. See page 61 for the list of the accessories that can be used with VVM 320.

Connection for communication with the most common accessories is shown here.

Accessories with circuit board AA5

Accessories that contain the AA5 circuit board are connected to the indoor module terminal block X4:13-15 on the input boardAA3.

If several accessories are to be connected or are already installed, the following instructions must be followed.

The first accessory board must be connected directly to the indoor module's terminal block AA3-X4. The following boards must be connected to the previous board in series.

Use cable type LiYY, EKKX or similar.

Refer to the accessory manual for further instructions.

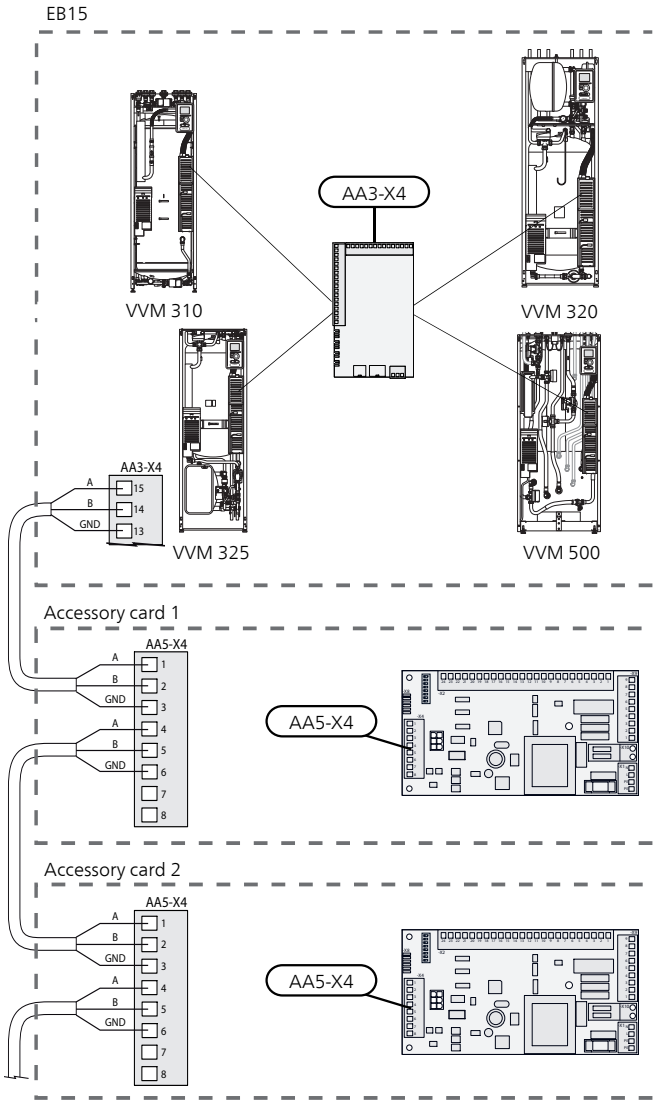

Accessories with circuit board AA9

Accessories that contain circuit board AA9 are connected to the indoor module terminal block X4:9-12 on the input boardAA3. Use cable type LiYY, EKKX or similar.

Refer to the accessory manual for further instructions.

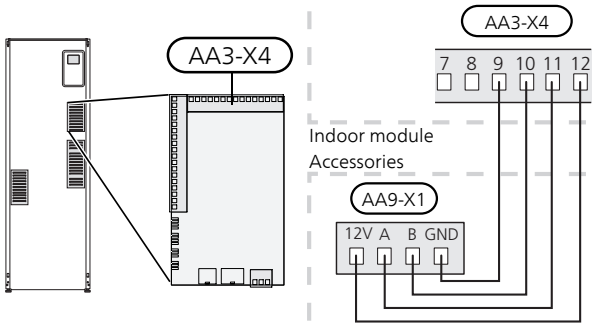

6 Commissioning and adjusting

Preparations

1. Check that the switch (SF1) is in position " ⏻".
2. Check that the drain valve is fully closed and that the temperature limiter (FD1) has not deployed.
3. Compatible NIBE air/water heat pumps must be equipped with a control card with display that has at least the software version given in the list on page 14.

Filling and venting

Filling the hot water heater in VVM 320

1. Open a hot water tap in the house.
2. Open shut-off valve. This valve should then be fully open during operations.
3. When water comes out of the hot water tap, the hot water heater is full and the tap can be closed.

Filling VVM 320

1. Open the vent valve (QM20).
2. Open the filling valve (QM11). VVM 320 is filled with water.
3. When the water exiting the vent valve (QM20) is not mixed with air, close the vent valve. After a while the pressure rises on the manometer. When the opening pressure for the safety valve has been reached, it starts to release water. Close the filler valve. Vent the water heater coil with QM22.
4. Open the safety valve until the pressure in VVM 320 drops to the normal working range (approx. 1 bar) and check that there is no air in the system by turning the vent valve (QM20).

Venting the climate system

1. Turn off the power supply to VVM 320.
2. Vent VVM 320 through the vent valve (QM20) and other climate systems through their relevant vent valves.
3. Keep topping up and venting until all air has been removed and the pressure is correct.

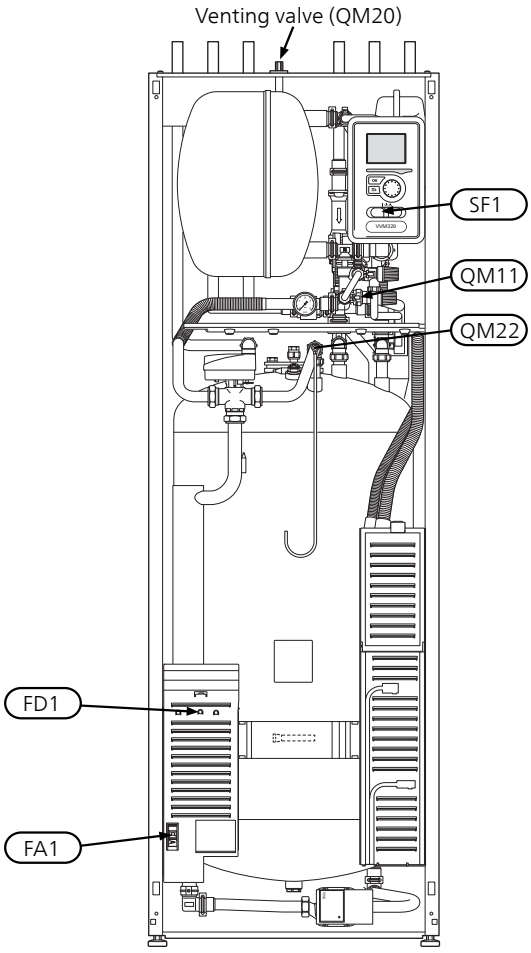

Draining the climate system

1. Connect a hose to the lower filler valve for heating medium (QM11).
2. Open the valve to drain the climate system.

Also see Draining the climate system on page 55.

Start-up and inspection

Start guide

NOTE

There must be water in the climate system before the switch is set to " I".

1. Set the indoor module's switch (SF1) to "I".
2. Follow the instructions in the start guide in the indoor module display. If the start guide does not start when you start the indoor module, start it manually in menu 5.7.

TIP

See page 40 for a more in-depth introduction to the installation's control system (operation, menus etc.).

Commissioning

The first time the installation is started a start guide is started. The start guide instructions state what needs to carried out at the first start together with a run through of the installation's basic settings.

The start guide ensures that start-up is carried out correctly and cannot be bypassed.The start guide can be started later in menu 5.7.

During the start up guide the reversing valves and the shunt valve are run backward and forwards to help vent VVM 320.

Caution

As long as the start guide is active, no function in VVM 320 will start automatically.

The guide will appear at each restart of VVM 320, until it is deselected on the last page.

Operation in the start guide

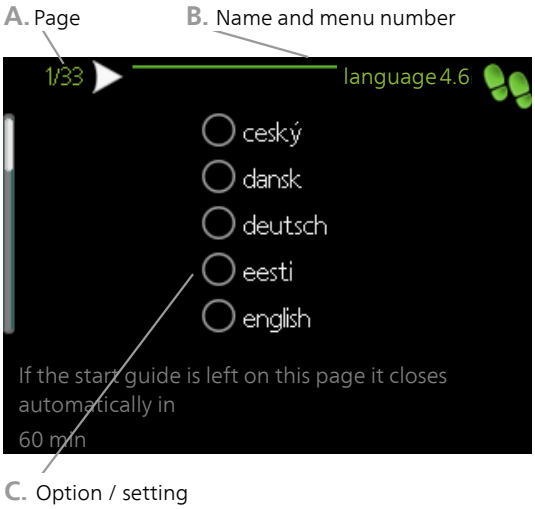

A. Page

Here you can see how far you have come in the start guide.

Scroll between the pages of the start guide as follows:

1. Turn the control knob until one of the arrows in the top left corner (at the page number) has been marked.
2. Press the OK button to skip between the pages in the start guide.

B. Name and menu number

Read what menu in the control system this page of the start guide is based on. The digits in brackets refer to the menu number in the control system.

If you want to read more about affected menus either consult the help menu or read the user manual.

C. Option / setting

Make settings for the system here.

D. Help menu

In many menus there is a symbol that indicates that extra help is available.

To access the help text:

1. Use the control knob to select the help symbol.
2. Press the OK button.

The help text often consists of several windows that you can scroll between using the control knob.

Commissioning without heat pump

The indoor module can be used without a heat pump, i.e only as an electric boiler, to produce heat and hot water before the heat pump is installed, for example.

Connect the pipe for docking in from the heat pump (XL8) with the pipe out to the heat pump (XL9).

Enter menu 5.2.2 System settings and deactivate the heat pump.

> **NOTE**
>
> Select operating mode auto or manual when the indoor module is to be used with the heat pump again.

Pump speed

The circulation pump (GP1) in VVM 320 is frequency controlled and sets itself using control and based on heating demand.

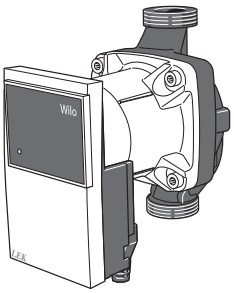

Available pressure, circulation pump, GP1

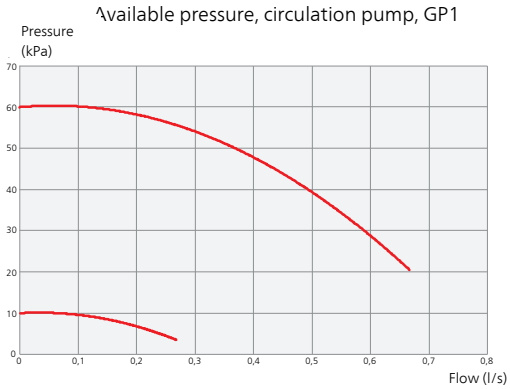

Post-adjustment, venting

Initially, air is released from the hot water and venting may be necessary. If gurgling sounds can be heard from the climate system, the entire system will require additional venting. The installation is vented via vent valves (QM20), (QM22) and other climate systems through their relevant vent valves. When venting, VVM 320 must be off.

Setting the cooling/heating curve

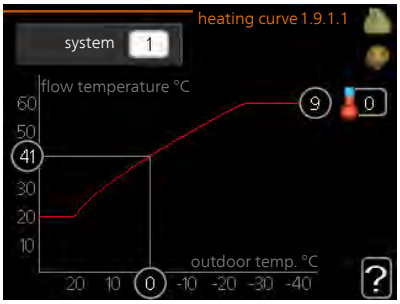

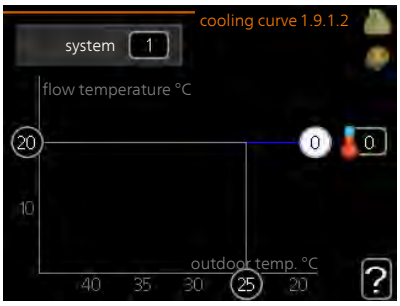

heating curve

Setting range: 0 – 15

Default value: 9

cooling curve (accessory required)

Setting range: 0 – 9

Default value: 0

The prescribed heating curve for your house can be viewed in the menu curve. The task of the heating curve is to give an even indoor temperature, regardless of the outdoor temperature, and thereby energy efficient operation. It is from this heating curve that the indoor module's control computer determines the temperature of the water to the heating system, supply temperature, and therefore the indoor temperature. Select the heating curve and read off how the supply temperature changes at different outdoor temperatures here. If there is access to cooling the same settings can be made for the cooling curve.

Curve coefficient

The slopes of the heating /cooling curves indicate how many degrees the supply temperature is to be increased/reduced when the outdoor temperature drops/increases. A steeper slope means a higher supply temperature for heating or a lower supply temperature for cooling at a certain outdoor temperature.

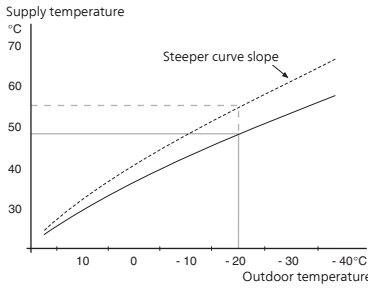

The optimum slope depends on the climate conditions in your location, if the house has radiators or under floor heating and how well insulated the house is.

The curve is set when the heating installation is installed, but may need adjusting later. Normally, the curve will not need further adjustment.

Caution

When making fine adjustments of the indoor temperature, the curve must be offset up or down instead, this is done in menu 1.1 temperature.

Curve offset

An offset of the curve means that the supply temperature changes as much for all the outdoor temperatures, e.g. that a curve offset of +2 steps increases the supply temperature by 5 C at all outdoor temperatures.

Flow line temperature– maximum and minimum values

Because the flow line temperature cannot be calculated higher than the set maximum value or lower than the set minimum value the heating curve flattens out at these temperatures.

Caution

Under floor heating system are normally max flow line temperature set to between 35 and 45 °C.

Must be restricted with underfloor cooling min. flow line temp. to prevent condensation.

Check the max temperature for your floor with your installer/floor supplier.

The figure at the end of the curve indicates the curve slope. The figure beside the thermometer gives the curve offset. Use the control knob to set a new value. Confirm the new setting by pressing the OK button.

Curve 0 is an own curve created in menu 1.9.7.

To select another curve (slope):

NOTE

If you only have one climate system, the number of the curve is already marked when the menu window opens.

1. Select the climate system (if more than one) for which the curve is to be changed.
2. When the climate system selection has been confirmed, the curve number is marked.
3. Press the OK button to access the setting mode
4. Select a new curve. The curves are numbered from 0 to 15, the greater the number, the steeper the slope and the greater the supply temperature. Curve 0 means that own curve (menu 1.9.7) is used.
5. Press the OK button to exit the setting.

To read off a curve:

1. Turn the control knob so that the ring on the shaft with the outdoor temperature is marked.
2. Press the OK button.
3. Follow the grey line up to the curve and out to the left to read off the value for the supply temperature at the selected outdoor temperature.
4. You can now select to take read outs for different outdoor temperatures by turning the control knob to the right or left and read off the corresponding flow temperature.
5. Press the OK or Back button to exit read off mode.

TIP

Wait 24 hours before making a new setting, so that the room temperature has time to stabilise.

If it is cold outdoors and the room temperature is too low, increase the curve slope by one increment.

If it is cold outdoors and the room temperature is too high, lower the curve slope by one increment.

If it is warm outdoors and the room temperature is too low, increase the curve offset by one increment.

If it is warm outdoors and the room temperature is too high, lower the curve offset by one increment.

Setting hot water circulation

hot water recirc.

operating time

Setting range: 1 – 60 min

Factory setting: 60 min

downtime

Setting range: 0 – 60 min

Factory setting: 0 min

Set the hot water circulation for up to three periods per day here. During the set periods the hot water circulation pump will run according to the settings above.

"operating time" decide how long the hot water circulation pump must run per operating instance.

"downtime" decide how long the hot water circulation pump must be stationary between operating instances.

> **NOTE**
> Hot water circulation is activated in menu 5.4 "soft inputs and outputs".

Pool

pool (accessory is required)

start temp

Setting range: 5.0 – 80.0 °C

Factory setting: 22.0 °C

stop temperature

Setting range: 5.0 – 80.0 °C

Factory setting: 24.0 °C

Select whether the pool control is to be activated and within what temperatures (start and stop temperature) pool heating must occur.

When the pool temperature drops below the set start temperature and there is no hot water or heating requirement, VVM 320 starts pool heating.

Untick "activated" to switch off the pool heating.

> **Caution**
> The start temperature cannot be set to a value that is higher than the stop temperature.

SG Ready

SG Ready

This function can only be used in mains networks that support the "SG Ready"-standard .

Make settings for the function "SG Ready" here.

Low price mode means that the electricity supplier has a low tariff and the system uses this to reduce costs.

Over capacity mode means that the electricity supplier has set the tariff very low and the system uses this to reduce the costs as much as possible.

affect room temperature

Here you set whether room temperature should be affected when activating "SG Ready".

With low price mode on "SG Ready" the parallel offset of the indoor temperature is increased by "+1". If a room sensor is installed and activated, the desired room temperature increases by 1 °C.

With over capacity mode on "SG Ready", the parallel offset for the indoor temperature is increased by"+2". If a room sensor is installed and activated, the desired room temperature increases by 2 °C.

affect hot water

Here you set whether the temperature of the hot water should be affected when activating "SG Ready".

With low price mode on "SG Ready" the stop temperature of the hot water is set as high as possible at only compressor operation (immersion heater not permitted).

With over capacity mode of "SG Ready" the hot water is set to "luxury" (immersion heater permitted).

affect cooling (accessory required)

Here you set whether room temperature during cooling operation should be affected when activating "SG Ready".

With low price mode of "SG Ready" and cooling operation the indoor temperature is not affected.

With over capacity mode of "SG Ready" and cooling operation the parallel offset for the indoor temperature is reduced by"-1". If a room sensor is installed and activated, the desired room temperature decreases by 1 °C.

affect pool temperature (accessory is required)

Here you set whether pool temperature should be affected when activating "SG Ready".

With low price mode on "SG Ready", the desired pool temperature (start and stop temperature) is increased by 1 °C.

With overcapacity mode on "SG Ready", the desired pool temperature (start and stop temperature) is increased by 2 °C.

> **NOTE**
> The function must be connected to two AUX inputs and activated in menu 5.4.

7 Control - Introduction

Display unit

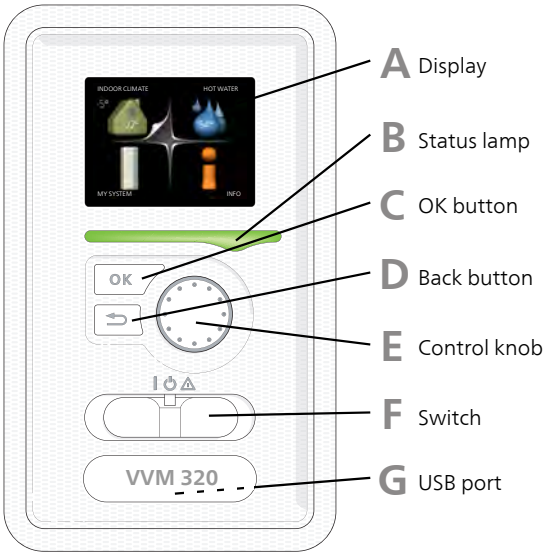

A Display

Instructions, settings and operational information are shown on the display. You can easily navigate between the different menus and options to set the comfort or obtain the information you require.

B Status lamp

The status lamp indicates the status of the indoor module. It:

- lights green during normal operation.
- lights yellow in emergency mode.
- lights red in the event of a deployed alarm.

C OK button

The OK button is used to:

- confirm selections of sub menus/options/set values/page in the start guide.

D Back button

The back button is used to:

- go back to the previous menu.
- change a setting that has not been confirmed.

E Control knob

The control knob can be turned to the right or left. You can:

- scroll in menus and between options.
- increase and decrease the values.
- change page in multiple page instructions (for example help text and service info).

F Switch (SF1)

The switch assumes three positions:

- On (I)
- Standby (⏻)
- Emergency mode (⚠)

Emergency mode must only be used in the event of a fault on the indoor module. In this mode, the compressor switches off and the immersion heater engages. The indoor module display is not illuminated and the status lamp illuminates yellow.

G USB port

The USB port is hidden beneath the plastic badge with the product name on it.

The USB port is used to update the software.

Visit www.nibeuplink.com and click the "Software" tab to download the latest software for your installation.

Menu system

When the door to the indoor module is opened, the menu system's four main menus are shown in the display as well as certain basic information.

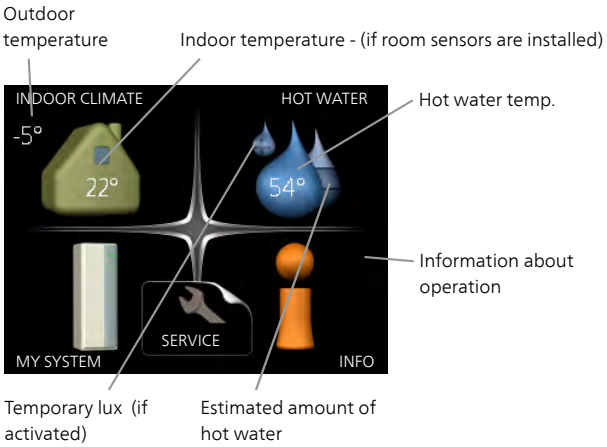

Menu 1 - INDOOR CLIMATE

Setting and scheduling the indoor climate. See information in the help menu or user manual.

Menu 2 - HOT WATER

Setting and scheduling hot water production. See information in the help menu or user manual.

Menu 3 - INFO

Display of temperature and other operating information and access to the alarm log. See information in the help menu or user manual.

Menu 4 - MY SYSTEM

Setting time, date, language, display, operating mode etc. See information in the help menu or user manual.

Menu 5 - SERVICE

Advanced settings. These settings are not available to the end user. The menu is visible when the Back button is pressed for 7 seconds, when you are in the start menu. See page 47.

Symbols in the display

The following symbols can appear in the display during operation.

Symbol	Description
	This symbol appears by the information sign if there is information in menu 3.1 that you should note.
	These two symbols indicate whether the compressor in the outdoor unit or additional heat is blocked in VVM 320. These can, for example, be blocked depending on which operating mode is selected in menu 4.2, if blocking is scheduled in menu 4.9.5 or if an alarm has occurred that blocks one of them.  Blocking the compressor.  Blocking additional heat.
	This symbol appears if periodic increase or lux mode for the hot water is activated.
	This symbol indicates whether "holiday setting" is active in 4.7.
	This symbol indicates whether VVM 320 has contact with NIBE NIBE Uplink.
	This symbol indicates the actual speed of the fan if the speed has changed from the normal setting. Accessory NIBE F135 required.
	This symbol indicates whether pool heating is active. Accessory needed.
	This symbol indicates whether cooling is active. Accessory needed.

Operation

To move the cursor, turn the control knob to the left or the right. The marked position is white and/or has a turned up tab.

Selecting menu

To advance in the menu system select a main menu by marking it and then pressing the OK button. A new window then opens with sub menus.

Select one of the sub menus by marking it and then pressing the OK button.

Selecting options

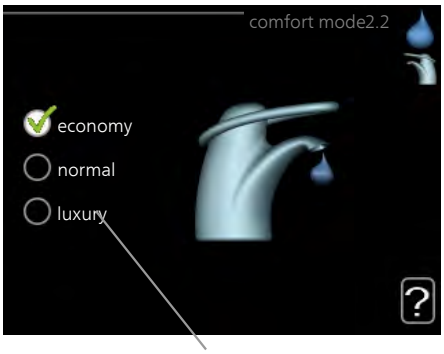

Alternative

In an options menu the current selected option is indicated by a green tick.

To select another option:

1. Mark the applicable option. One of the options is pre-selected (white).
2. Press the OK button to confirm the selected option. The selected option has a green tick.

Setting a value

Values to be changed

To set a value:

1. Mark the value you want to set using the control knob. 01
2. Press the OK button. The background of the value becomes green, which means that you have accessed the setting mode. 01
3. Turn the control knob to the right to increase the value and to the left to reduce the value. 04
4. Press the OK button to confirm the value you have set. To change and return to the original value, press the Back button. 04

Use the virtual keyboard

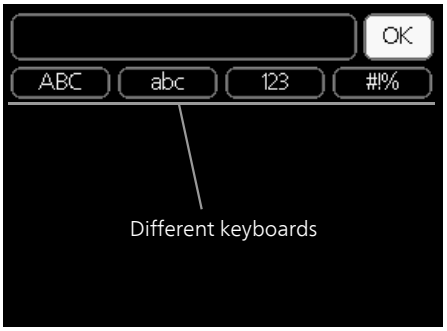

In some menus where text may require entering, a virtual keyboard is available.

Depending on the menu, you can gain access to different character sets which you can select using the control knob. To change character table, press the Back button. If a menu only has one character set the keyboard is displayed directly.

When you have finished writing, mark "OK" and press the OK button.

Scroll through the windows

A menu can consist of several windows. Turn the control knob to scroll between the windows.

Current menu window

Number of windows in the menu

Scroll through the windows in the start guide

Arrows to scroll through window in start guide

1. Turn the control knob until one of the arrows in the top left corner (at the page number) has been marked.
2. Press the OK button to skip between the steps in the start guide.

Help menu

In many menus there is a symbol that indicates that extra help is available.

To access the help text:

1. Use the control knob to select the help symbol.
2. Press the OK button.

The help text often consists of several windows that you can scroll between using the control knob.

8 Control - Menus

Menu 1 - INDOOR CLIMATE

1 - INDOOR CLIMATE	1.1 - temperature	1.1.1 - heating	
		1.1.2 - cooling *	
	1.2 - ventilation *		
	1.3 - scheduling	1.3.1 - heating	
		1.3.2 - cooling *	
		1.3.3 - ventilation *	
	1.9 - advanced	1.9.1 - curve	1.9.1.1 heating curve
			1.9.1.2 - cooling curve *
		1.9.2 - external adjustment	
		1.9.3 - min. flow line temp.	
		1.9.4 - room sensor settings	
		1.9.5 - cooling settings *	
		1.9.6 - fan return time *	
		1.9.7 - own curve	1.9.7.1 - heating
			1.9.7.2 - cooling *
		1.9.8 - point offset	
		1.9.11 - +Adjust	

* Accessories are needed.

Menu 2 - HOT WATER

2 - HOT WATER	2.1 - temporary lux	
	2.2 - comfort mode	
	2.3 - scheduling	
	2.9 - advanced	2.9.1 - periodic increase
		2.9.2 - hot water recirc.

Menu 3 - INFO

3 - INFO	3.1 - service info
	3.2 - compressor info
	3.3 - add. heat info
	3.4 - alarm log
	3.5 - indoor temp. log

* Accessories are needed.

Menu 4 - MY SYSTEM

4 - MY SYSTEM	4.1 - plus functions	4.1.1 - pool *	
		4.1.3 - internet	4.1.3.1 - NIBE Uplink
			4.1.3.8 - tcp/ip settings
			4.1.3.9 - proxy settings
		4.1.4 - sms *	
		4.1.5 - SG Ready	
		4.1.6 - smart price adaption™	
		4.1.7 - smart home *	
		4.1.8 - smart energy source™	4.1.8.1 - settings
			4.1.8.2 - set. price
			4.1.8.3 - CO2 impact
			4.1.8.4 - tariff periods, electricity
			4.1.8.6 - tariff per, ext. shunt add
			4.1.8.7 - tariff per, ext. step add
			4.1.8.8 - tariff periods, OPT10
	4.2 - op. mode		
	4.3 - my icons		
	4.4 - time & date		
	4.6 - language		
	4.7 - holiday setting		
	4.9 - advanced	4.9.1 - op. prioritisation	
		4.9.2 - auto mode setting	
		4.9.3 - degree minute setting	
		4.9.4 - factory setting user	
		4.9.5 - schedule blocking	
		4.9.6 - schedule silent mode	

* Accessory needed.

Descriptions of menu 1–4 can be found in the user handbook.

Menu 5 - SERVICE

Overview

5 - SERVICE	5.1 - operating settings	5.1.1 - hot water settings	
		5.1.2 - max flow line temperature	
		5.1.3 - max diff flow line temp.	
		5.1.4 - alarm actions	
		5.1.5 - fan sp. exhaust air *	
		5.1.12 - internal electrical addition	
		5.1.13 - max inst. el.pwr (BBR)	
		5.1.14 - flow set. climate system	
		5.1.18 - flow setting charge pump	
		5.1.22 - heat pump testing	
		5.1.23 - compressor curve	
		5.1.25 - time filter alarm	
	5.2 - system settings	5.2.2 - installed heat pump	
		5.2.4 - accessories	
	5.3 - accessory settings	5.3.2 - shunt controlled add. heat *	
		5.3.3 - extra climate system *	
		5.3.6 - step controlled add. heat *	
		5.3.7 - external addition *	
		5.3.8 - hot water comfort *	
		5.3.14 - F135 *	
		5.3.15 - GBM communications module *	
		5.3.18 - pool*	
		5.3.19 - active cooling 4 pipe*	
		5.3.20 - flow sensor*	
	5.4 - soft in/outputs		
	5.5 - factory setting service		
	5.6 - forced control		
	5.7 - start guide		
	5.8 - quick start		
	5.9 - floor drying function		
	5.10 - change log		
	5.12 - country		5.11.1.2 - heating medium pump (GP1)

* Accessory needed.

Go to the main menu and hold the Back button in for 7 seconds to access the Service menu.

Sub-menus

Menu SERVICE has orange text and is intended for the advanced user. This menu has several sub-menus. Status information for the relevant menu can be found on the display to the right of the menus.

operating settings Operating settings for the indoor module.

system settings System settings for the indoor module, activating accessories etc.

accessory settings Operational settings for different accessories.

soft in/outputs Setting software controlled in and outputs on the input circuit board (AA3).

factory setting service Total reset of all settings (including settings available to the user) to default values.

forced control Forced control of the different components in the indoor module.

start guide Manual start of the start guide which is run the first time when the indoor module is started.

quick start Quick starting the compressor.

NOTE

Incorrect settings in the service menus can damage the installation.

Menu 5.1 - operating settings

Operating settings can be made for the indoor module in the sub menus.

Menu 5.1.1 - hot water settings

VVM 320 Stainless steel or VVM 320 Enamel

economy

Setting range start temp. economy: 5 – 70 °C

Factory setting start temp. economy: 46 °C

Setting range stop temp. economy: 5 – 70 °C

Factory setting stop temp. economy: 49 °C

normal

Setting range start temp. normal: 5 – 70 °C

Factory setting start temp. normal: 49 °C

Setting range stop temp. normal: 5 – 70 °C

Factory setting stop temp. normal: 52 °C

luxury

Setting range start temp. lux: 5 – 70 °C

Factory setting start temp. lux: 55 °C

Setting range stop temp. lux: 5 – 70 °C

Factory setting stop temp. lux: 58 °C

stop temp. per. increase

Setting range: 55 – 70 °C

Factory setting: 55 °C

Here you set the start and stop temperature of the hot water for the different comfort options in menu 2.2 as well as the stop temperature for periodic increase in menu 2.9.1.

Menu 5.1.2 - max flow line temperature

climate system

Setting range: 5-70 °C

Default value: 60 °C

Set the maximum supply temperature for the climate system here. If the installation has more than one climate system, individual maximum supply temperatures can be set for each system. Climate systems 2 - 8 cannot be set to a higher max supply temperature than climate system 1.

Caution

Underfloor heating systems are normally max flow line temperature set between 35 and 45 °C.

Check the max floor temperature with your floor supplier.

Menu 5.1.3 - max diff flow line temp.

max diff compressor

Setting range: 1 – 25 °C

Default value: 10 °C

max diff addition

Setting range: 1 – 24 °C

Default value: 7 °C

Here you set the maximum permitted difference between the calculated and actual supply temperature during compressor respectively add. heat mode. Max diff. additional heat can never exceed max diff. compressor

max diff compressor

If the current supply temperature **exceeds** the calculated flow with set value, the degree minute value is set to 0. The compressor in the heat pump stops when there is only a heating demand.

max diff addition

If "addition" is selected and activated in menu 4.2 and the present supply temp **exceeds** the calculated with set value, the additional heat is forced to stop.

Menu 5.1.4 - alarm actions

Select if you want the indoor module to alert you that there is an alarm in the display here.

Caution

If no alarm action is selected, it can result in higher energy consumption in the event of an alarm.

Menu 5.1.5 - fan sp. exhaust air (accessory is required)

normal and speed 1-4

Setting range: 0 – 100 %

Factory setting normal: 65 %

Factory setting speed 1: 0 %

Factory setting speed 2: 30 %

Factory setting speed 3: 80 %

Factory setting speed 4: 100 %

Set the speed for the four different selectable modes for the fan here.

Caution

An incorrectly set ventilation flow can damage the house and may also increase energy consumption.

Menu 5.1.12 - internal electrical addition

max connected el. add.

Factory setting 3x400V: 9 kW

Factory setting 3x230V: 9 kW

Factory setting 1x230V: 7 kW

fuse size

Setting range: 1 - 200 A

Factory setting 3x400V: 16 A

Factory setting 3x230V: 32 A

Factory setting 1x230V: 32 A

Here you set the max. electrical output of the internal electrical addition in VVM 320 and the fuse size for the installation.

Here you can also check which current sensor is installed on which incoming phase to the property (this requires current sensors to be installed, see page 31). Do this by marking "detect phase order" and pressing the OK button.

The results of these checks appear just below the menu selection "detect phase order".

Menu 5.1.13 - max inst. el.pwr (BBR)

max installed el.pwr (only this machine)

Setting range: 0.000 - 30.000 kW

Default values: 15.000 kW

If the above building regulations are not applicable, do not use this setting.

In order to meet certain building regulations, it is possible to lock the device's maximum power output. In this menu, you can set the value corresponding to the heat pump's maximum power connection for heating, hot water and cooling, if applicable Note whether there are also external electrical components that are to be included. After the value has been locked, a weeks cooling-off period starts. After this period, parts in the machine must be replaced in order to obtain greater power.

Menu 5.1.14 - flow set. climate system

presettings

Setting range: radiator, floor heat., rad. + floor heat., DOT °C

Default value: radiator

Setting range DOT: -40.0 – 20.0 °C

Factory setting DOT: -18.0 °C

own setting

Setting range dT at DOT: 2.0 – 20.0

Factory setting dT at DOT: 10.0

Setting range DOT: -40.0 – 20.0 °C

Factory setting DOT: -18.0 °C

The type of heating distribution system the heating medium pump (GP1) works towards is set here.

dT at DOT is the difference in degrees between flow and return temperatures at dimensioned outdoor temperature.

Menu 5.1.18 - flow setting charge pump

Check that the flow for the charge pump through the heat pump is sufficient. Activate the flow test to measure delta (the difference between the flow and return line temperatures from the heat pump). The test is OK if delta lies below the parameter shown in the display.

NOTE

The hot water temperature (BT6) must be below 40 °C in order for the flow test to start.

Menu 5.1.22 - heat pump testing

NOTE

This menu is intended for testing VVM 320 according to different standards.

Use of this menu for other reasons may result in your installation not functioning as intended.

This menu contains several sub-menus, one for each standard.

Menu 5.1.23 - compressor curve

NOTE

This menu is only displayed if VVM 320 is connected to a heat pump with inverter controlled compressor.

Set whether the compressor in the heat pump should work to a particular curve under specific requirements or if it should work to predefined curves.

You set a curve for a demand (heat, hot water etc.) by unticking "auto", turning the control knob until a temperature is marked and pressing OK. You can now set at what temperatures the max. and min. frequencies, respectively will occur.

This menu can consist of several windows (one for each available demand), use the navigation arrows in the top left corner to change between the windows.

Menu 5.1.25 - time filter alarm

months btwn filter alarms

Setting range: 1 – 24

Factory setting: 3

Here you set the number of months between alarms for a reminder to clean the filter in F135

Menu 5.2 - system settings

Make different system settings for your installation here, e.g. activate the connected heat pump and which accessories are installed.

Menu 5.2.2 - installed heat pump

If a heat pump is connected to the indoor module, activate it here.

Menu 5.2.4 - accessories

Set which accessories are installed on the installation here.

There are two ways of activating connected accessories. You can either mark the alternative in the list or use the automatic function "search installed acc.".

search installed acc.

Mark “search installed acc." and press the OK button to automatically find connected accessories for VVM 320.

Menu 5.3 - accessory settings

The operating settings for accessories that are installed and activated are made in the sub-menus for this.

Menu 5.3.2 - shunt controlled add. heat

prioritised additional heat

Setting range: on/off

Factory setting: off

start diff additional heat

Setting range: 0 – 2000 GM

Default values: 400 GM

minimum running time

Setting range: 0 – 48 h

Default value: 12 h

min temp.

Setting range: 5 – 90 °C

Default value: 55 °C

mixing valve amplifier

Setting range: 0.1 –10.0

Default value: 1.0

mixing valve step delay

Setting range: 10 – 300 s

Default values: 30 s

Set when the addition is to start, the minimum run time and the minimum temperature for external addition with shunt here. External addition with shunt is for example a wood/oil/gas/pellet boiler.

You can set shunt valve amplification and shunt valve waiting time.

Selecting "prioritised additional heat" uses the heat from the external additional heat instead of the heat pump. The shunt valve is regulated as long as heat is available, otherwise the shunt valve is closed.

See the accessory installation instructions for function description.

Menu 5.3.3 - extra climate system

use in heating mode

Setting range: on/off

Factory setting: on

use in cooling mode

Setting range: on/off

Factory setting: off

mixing valve amplifier

Setting range: 0.1 – 10.0

Default value: 1.0

mixing valve step delay

Setting range: 10 – 300 s

Default values: 30 s

In menu 5.3.3, you choose the climate system (2 - 8) you wish to set. In the next menu you can make settings for the climate system that you have selected.

If the heat pump is connected to more than one climate system, condensation may occur in these, if they are not intended for cooling.

To prevent condensation, check that "use in heating mode" is checked for the climate systems that are not intended for cooling. This means that the sub-shunts to the extra climate systems close, when cooling operation is activated.

The shunt amplification and shunt waiting time for the different extra climate systems that are installed are also set here.

See the accessory installation instructions for function description.

Menu 5.3.6 - step controlled add. heat

start addition

Setting range: -2000 – -30 GM

Default values: -400 GM

diff. between additional steps

Setting range: 0 – 1000 GM

Default values: 100 GM

max step

Setting range
(binary stepping deactivated): 0 – 3

Setting range
(binary stepping activated): 0 – 7

Default value: 3

binary stepping

Setting range: on/off

Factory setting: off

Make settings for step controlled addition here. Step controlled addition is for example an external electric boiler.

It is possible, for example, to select when the additional heat is to start, to set the maximum number of permitted steps and whether binary stepping is to be used.

When binary stepping is deactivated (off), the settings refer to linear stepping.

See the accessory installation instructions for function description.

Menu 5.3.7 - external addition

Make settings for external addition here. External addition is for example external oil, gas or electric boiler.

If the external addition is not step controlled, in addition to selecting when this should start also set the run time for the addition.

If the external addition is step controlled you can select when the addition is to start, set the maximum number of permitted steps and whether binary stepping is to be used.

If you select "prioritised additional heat" the heat is used from the external addition instead of the heat pump.

See the accessory installation instructions for function description.

Menu 5.3.8 - hot water comfort

activating the mixing valve

Setting range: on/off

Factory setting: off

outgoing hot water

Setting range: 40 - 65 °C

Default value: 55 °C

mixing valve amplifier

Setting range: 0.1 – 10.0

Default value: 1.0

mixing valve step delay

Setting range: 10 – 300 s

Default values: 30 s

Make settings for the hot water comfort here.

See the accessory installation instructions for function description.

activating the mixing valve: Activate here whether a mixer valve for limiting the temperature of hot water from the water heater is installed.

If this alternative has been activated, you can set the outgoing hot water temperature, shunt amplification and shunt waiting time for the mixer valve.

outgoing hot water: Set the temperature at which the mixing valve is to restrict hot water from the water heater.

See the accessory installation instructions for function description.

Menu 5.3.14 - F135

charge pump speed

Setting range: 1 – 100 %

Factory setting: 70 %

hot water at cooling

Setting range: on/off

Factory setting: off

Here you can set the charge pump speed for F135. You can also choose to charge hot water with F135 at the same time as the outdoor section produces cooling.

NOTE

The cooling accessory ACS 310 is required to enable activation of "hot water during cooling".

Caution

Cooling must be permitted in Menu 5.11.1.1 - heat pump so that "hot water during cooling" can be activated.

Menu 5.3.15 - GBM communication module

start diff additional heat

Setting range: 10 – 2,000 GM

Factory setting: 400 GM

hysteresis

Setting range: 10 – 2,000 GM

Factory setting: 100 GM

Make settings for the gas boiler GBM 10-15 here. For example . you can select when the gas boiler is to start. See the accessory installation instructions for a description of function.

Menu 5.3.18 - pool

Here you select which pump to use in the system.

Menu 5.3.19 - active cooling 4 pipe

Here you select which pump to use in the system.

Menu 5.3.20 - flow sensor

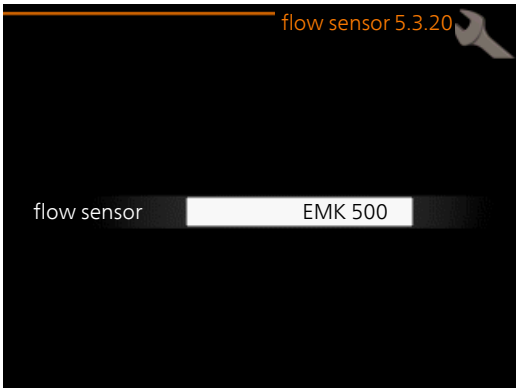

flow sensor

Setting option: EMK 500, EMK 310 / 300, EMK 150

Factory setting: EMK 500

Here you select which flow sensor is used for the energy measurement.

Menu 5.4 - soft in/outputs

Here you can select the in/output on the input circuit board (AA3) the external contact function (page 31) is to be connected to.

Selectable inputs on terminal block AUX1-5 (AA3-X6:9-18) and output AA3-X7 (on the input circuit board).

Menu 5.5 - factory setting service

All settings can be reset (including settings available to the user) to default values here.

NOTE

When resetting, the start guide is displayed the next time the indoor module is restarted.

Menu 5.6 - forced control

You can force control the different components in the indoor module and any connected accessories here.

NOTE

Forced control is only intended to be used for troubleshooting purposes. Using the function in any other way may cause damage to the components in your climate system.

Menu 5.7 - start guide

When the indoor module is started for the first time the start guide starts automatically. Start it manually here.

See page 36 for more information about the start guide.

Menu 5.8 - quick start

It is possible to start the compressor from here.

Caution

There must be a heating or hot water demand to start the compressor.

Caution

Do not quick start the compressor too many times over a short period of time as this may damage the compressor and its surrounding equipment.

Menu 5.9 - floor drying function

length of period 1 – 7

Setting range: 0 – 30 days

Factory setting, period 1 – 3, 5 – 7: 2 days

Factory setting, period 4: 3 days

temp. period 1 – 7

Setting range: 15 – 70 °C

Default value:

temp. period 1	20 °C
temp. period 2	30 °C
temp. period 3	40 °C
temp. period 4	45 C
temp. period 5	40 °C
temp. period 6	30 °C
temp. period 7	20 °C

Set the function for under floor drying here.

You can set up to seven period times with different calculated flow temperatures. If less than seven periods are to be used, set the remaining period times to 0 days.

Mark the active window to activate the underfloor drying function. A counter at the bottom shows the number of days the function has been active.

NOTE

During under floor drying, the heating medium pump in 100% runs, regardless of the setting in menu 5.1.10.

TIP

If operating mode "add. heat only" is to be used, select it in menu 4.2.

Menu 5.10 - change log

Read off any previous changes to the control system here.

The date, time and ID no. (unique to certain settings) and the new set value is shown for every change.

NOTE

The change log is saved at restart and remains unchanged after factory setting.

Menu 5.11 - heat pump settings

Settings for installed heat pump can be made in the submenus.

Menu 5.11.1 - EB101

Make settings specifically for the installed heat pump and heating medium pump here.

Menu 5.11.1.1 - heat pump

Make settings for the installed heat pump here. To see what settings you can make, see installation manual for the heat pump.

Menu 5.11.1.2 - heating medium pump (GP1)

op. mode

Setting range: auto / intermittent

Default value: auto

Set the operating mode of the heating medium pump here.

auto: The heating medium pump runs according to the current operating mode for VVM 320.

intermittent: The heating medium pump starts and stops 20 seconds before and after the compressor in the heat pump.

speed during operation

heating, hot water, pool, cooling

Setting range: auto / manual

Default value: auto

Manual setting

Setting range: 1–100 %

Default values: 70 %

speed in wait mode

Setting range: 1–100 %

Default values: 30 %

max. allowed speed

Setting range: 80–100 %

Default values: 100 %

Set the speed at which the heating medium pump is to operate in the present operating mode. Select "auto" if the speed of the heating medium pump is to be regulated automatically (factory setting) for optimal operation.

If "auto" is activated for heating operation, you can also make the setting "max. allowed speed" which restricts the heating medium pump and does not allow it to run at a higher speed than the set value.

For manual operation of the heating medium pump deactivate "auto" for the current operating mode and set the value to between 1 and 100 % (the previously set value for "max. allowed speed" no longer applies).

wait mode means heating or cooling operating modes for the heating medium pump, when the heat pump has neither a need for compressor operation nor electrical addition and slows down.

5.12 - country

Select here where the product was installed. This allows access to country specific settings in your product.

Language settings can be made regardless of this selection.

NOTE

This option locks after 24 hours, restart of display or program updating.

9 Service

Service actions

> **NOTE**
> Servicing should only be carried out by persons with the necessary expertise.
>
> When replacing components on VVM 320 only replacement parts from NIBE may be used.

Emergency mode

Emergency mode is used in event of operational interference and in conjunction with service. Hot water capacity is reduced in this mode.

Emergency mode is activated by setting switch (SF1) in mode "⚠". This means that:

- The status lamp illuminates yellow.
- The display is not lit and the control computer is not connected.
- The temperature at the immersion heater is controlled by the thermostat (FD1-BT30). It can be set to 35 or 45 °C.
- Only the circulation pumps and electric additional heat are active. The electrical additional heat power in emergency mode is set in the immersion heater board (AA1). See page 29 for instructions.

Draining the hot water heater

The siphon principle is used to empty the hot water heater. This can be done either via the drain valve on the incoming cold water pipe or by inserting a hose into the cold water connection.

Draining the climate system

In order to carry out service on the climate system, it may be easier to drain the system first using the filler valve (QM11).

> **NOTE**
> There may be some hot water when draining the heating medium side/climate system. There is a risk of scalding.

1. Connect a hose to the lower filler valve for heating medium (QM11).
2. Open the valve to drain the climate system.

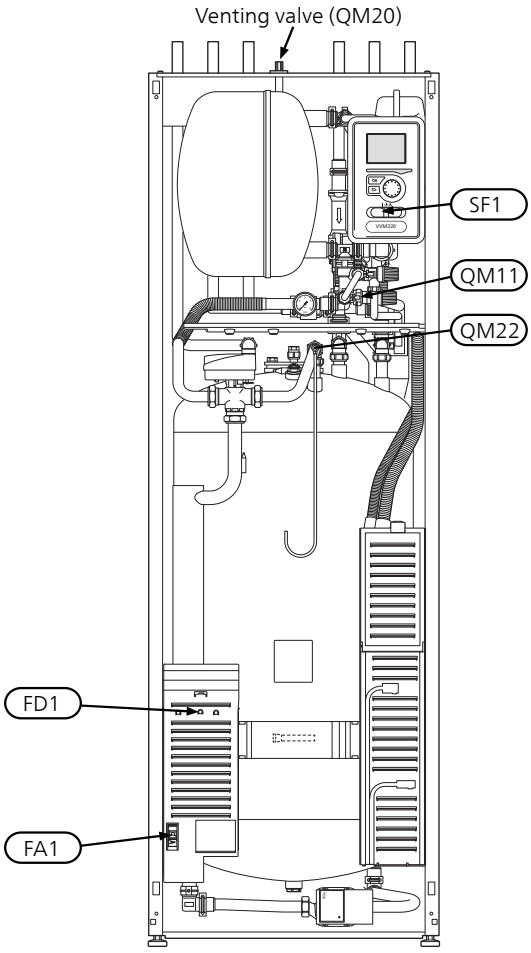

Temperature sensor data

Temperature (°C)	Resistance (kOhm)	Voltage (VDC)
-40	351.0	3.256
-35	251.6	3.240
-30	182.5	3.218
-25	133.8	3.189
-20	99.22	3.150
-15	74.32	3.105
-10	56.20	3.047
-5	42.89	2.976
0	33.02	2.889
5	25.61	2.789
10	20.02	2.673
15	15.77	2.541
20	12.51	2.399
25	10.00	2.245
30	8.045	2.083
35	6.514	1.916
40	5.306	1.752
45	4.348	1.587
50	3.583	1.426
55	2.968	1.278
60	2.467	1.136
65	2.068	1.007
70	1.739	0.891
75	1.469	0.785
80	1.246	0.691
85	1.061	0.607
90	0.908	0.533
95	0.779	0.469
100	0.672	0.414

USB service outlet

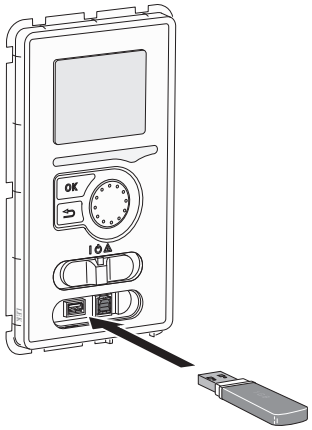

The display unit is equipped with a USB socket that can be used to update the software, save logged information and handle the settings in VVM 320.

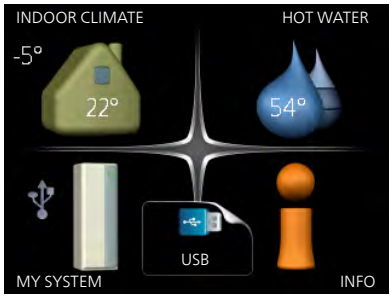

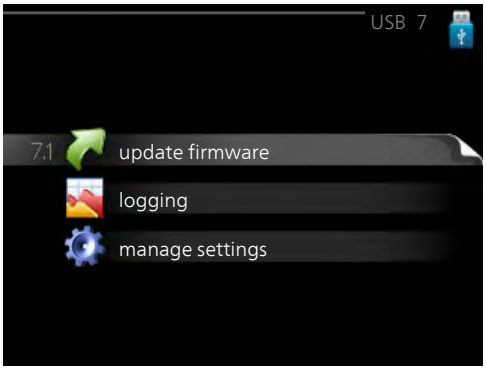

When a USB memory is connected a new menu (menu 7) appears in the display.

Menu 7.1 - update firmware

This allows you to update the software in VVM 320.

> **NOTE**
> For the following functions to work the USB memory must contain files with software for VVM 320 from NIBE.

The fact box at the top of the display shows information (always in English) of the most probable update that the update software has selected form the USB memory.

This information states which product the software is intended for, the software version and general information about them. If you wish to select another file than the one selected, the correct file can be selected by "choose another file".

start updating

Select “start updating" if you want to start the update. You are asked whether you really want to update the software. Respond "yes" to continue or "no" to undo.

If you responded"yes" to the previous question the update starts and you can now follow the progress of the update on the display. When the update is complete VVM 320 restarts.

> **NOTE**
> A software update does not reset the menu settings in VVM 320.

> **NOTE**
> If the update is interrupted before it is complete (for example power cut etc.), the software can be reset to the previous version if the OK button is held in during start up until the green lamp starts to illuminate (takes about 10 seconds).

choose another file

Select “choose another file" if you do not want to use the suggested software. When you scroll through the files, information about the marked software is shown in a fact box just as before. When you have selected a file with the OK button you will return to the previous page (menu 7.1) where you can choose to start the update.

Menu 7.2 - logging

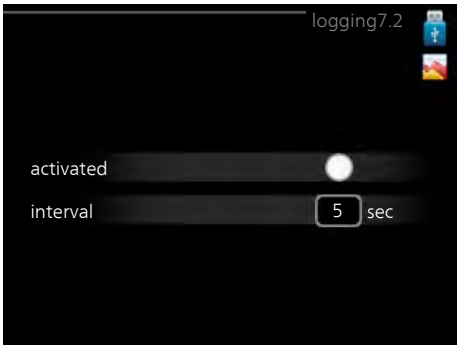

Setting range: 1 s – 60 min

Factory setting range: 5 s

Here you can choose how current measurement values from VVM 320 should be saved onto a log file on the USB memory.

1. Set the desired interval between loggings.
2. Tick “activated".
3. The present values from VVM 320 are saved in a file in the USB memory at the set interval until “activated" is unticked.

> **NOTE**
> Untick "activated" before removing the USB memory.

Menu 7.3 - manage settings

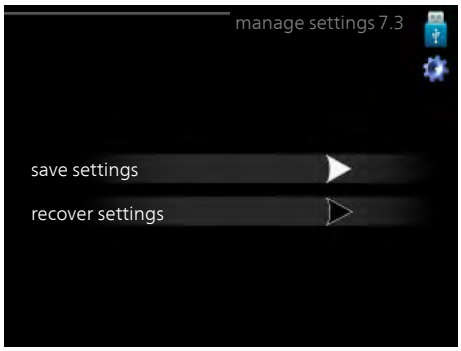

Here you can manage (save as or retrieve from) all the menu settings (user and service menus) in VVM 320 with a USB memory.

Via "save settings" you save the menu settings to the USB memory in order to restore them later or to copy the settings to another VVM 320.

> **NOTE**
> When you save the menu settings to the USB memory you replace any previously saved settings on the USB memory.

Via "recover settings" you reset all menu settings from the USB memory.

> **NOTE**
> Reset of the menu settings from the USB memory cannot be undone.

10 Disturbances in comfort

In most cases, the indoor module notes operational interference (operational interference can lead to disturbance in comfort) and indicates this with alarms and shows action instructions in the display.

Info menu indoor module

All the indoor module measured values are gathered under menu 3.1 in the indoor module menu system. Looking through the values in this menu can often simplify finding the source of the fault.

Manage alarm

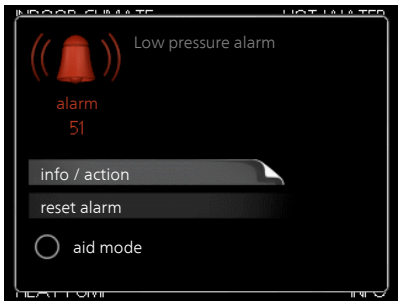

In the event of an alarm, some kind of malfunction has occurred, which is indicated by the status lamp changing from green continuously to red continuously. In addition, an alarm bell appears in the information window.

Alarm

In the event of an alarm with a red status lamp a malfunction has occurred that the indoor module cannot remedy itself. In the display, by turning the control knob and pressing the OK button, you can see the type of alarm it is and reset it. You can also choose to set the indoor module to aid mode.

info / action Here you can read what the alarm means and receive tips on what you can do to correct the problem that caused the alarm.

reset alarm In most cases it is enough to select "reset alarm" to correct the problem that caused the alarm. If a green light illuminates after selecting "reset alarm" the alarm has been remedied. If a red light is still visible and a menu called "alarm" is visible in the display, the problem that caused the alarm remains. If the alarm disappears and then returns, see the troubleshooting section (page 59).

aid mode "aid mode" is a type of emergency mode. This means that the indoor module produces heat and/or hot water, even though there is some kind of problem. This could mean that the heat pump's compressor is not running. In this case the immersion heater produces heat and/or hot water.

> **NOTE**
> To select aid mode an alarm action must be selected in the menu 5.1.4.

> **Caution**
> Selecting "aid mode" is not the same as correcting the problem that caused the alarm. The status lamp will therefore continue to be red.

Troubleshooting

If the operational interference is not shown in the display the following tips can be used:

Basic actions

Start by checking the following possible fault sources:
- The switch's (SF1) position.
- Group and main fuses of the accommodation.
- The property's earth circuit breaker.
- The indoor module's miniature circuit breaker (FA1).
- The indoor module's temperature limiter (FD1).
- Correctly set load monitor (if installed).

Low hot water temperature or a lack of hot water

- (QM10) for the water heater.

  (QM10) for the hot water.
- Indoor module in incorrect operating mode.
  - If mode "manual" is selected, select "addition".
- Large hot water consumption.
  - Wait until the hot water has heated up. Temporarily increased hot water capacity (temporary lux) can be activated in menu 2.1.
- Too low hot water setting.
  - Enter menu 2.2 and select a higher comfort mode.

Low room temperature

- Closed thermostats in several rooms.
- Indoor module in incorrect operating mode.
  - Enter menu 4.2. If mode "auto" is selected, select a higher value on "stop heating" in menu 4.9.2.
  - If mode "manual" is selected, select "heating". If this is not enough, select "addition".
- Too low set value on the automatic heating control.
  - Enter menu 1.1 "temperature" and adjust the offset heating curve up. If the room temperature is only low in cold weather the curve slope in menu 1.9.1 "heating curve" needs adjusting up.
- "Holiday mode" activated in menu 4.7.
  - Enter menu 4.7 and select "Off".
- External switch for changing the room heating activated.
  - Check any external switches.
- Air in the climate system.
  - Vent the climate system (see page 35)
- (QM20), (QM32) to the climate system.

  Closed valves to the climate system.

  (QM40), (QM41) to the climate system.

  (QM31), (QM32) to the heating system.

(QM31) to the heating system.

High room temperature

- Too high set value on the automatic heating control.
  - Enter menu 1.1 (temperature) and reduce the offset heating curve. If the room temperature is only high in cold weather the curve slope in menu 1.9.1 "heating curve" needs adjusting down.
- External switch for changing the room heating activated.
  - Check any external switches.

Low system pressure

- Not enough water in the climate system.
  - Fill the climate system with water and check for leaks (see page 35).

The heat pump's compressor does not start

- There is no heating requirement.
  - The indoor module does not call on heating nor hot water.
- Temperature conditions tripped.
  - Wait until the temperature condition has been reset.
- Minimum time between compressor starts has not been reached.
  - Wait 30 minutes and check if the compressor has started.
- Alarm tripped.
  - Follow the display instructions.

11 Accessories

Accessory card AXC 40

An accessory card is required if step controlled addition (e.g. external electric boiler) or if shunt controlled addition (e.g. wood/oil/gas/pellet boiler) is to be connected to VVM 320.

An accessory card is also required if for example an external circulation pump is connected to VVM 320 at the same time that the buzzer alarm is activated.

Part no. 067 060

Active cooling. ACS 310

Part no. 067 248

Auxiliary relay HR 10

Part no. 067 309

Base extension EF 45

This accessory can be used when pipes for the heat pump come up out of the floor.

Part no. 067 152

Buffer vessel UKV

UKV 40

Part no. 088 470

UKV 100

Part no. 088 207

UKV 500

Part no. 080 302

UKV 200 Cooling

Part no. 080 321

UKV 300 Cooling

Part no. 080 330

Communications module MODBUS 40

MODBUS 40 enables VVM 320 to be controlled and monitored using a DUC (computer sub-centre) in the building. Communication is then performed using MODBUS-RTU.

Part no. 067 144

Communications module SMS 40

When there is no internet connection, you can use the accessory SMS 40 to control VVM 320 via SMS.

Part no. 067 073

Energy measurement kit EMK 300

Part no. 067 314

Exhaust air heat pump F135

F135 is an exhaust air heap pump specially designed to combine recovery of mechanical exhaust air with air-water indoor modules, e.g. VVM. The indoor module controls F135.

Part no. 066 075

External electric additional heat ELK

ELK 5

Immersion heater

5 kW, 1 x 230 V

Part no. 069 025

ELK 8

Immersion heater

8 kW, 1 x 230 V

Part no. 069 026

ELK 15

Immersion heater

15 kW, 3 x 400 V

Part no. 069 022

Extra shunt group ECS 40/ECS 41

This accessory is used when VVM 320 is installed in houses with two or more different heating systems that require different supply temperatures.

ECS 40 (Max 80 m²)	*ECS 41 (Min 80 m²)*
Part no. 067 287	Part no. 067 288

Gas accessory

Gas boiler GBM 10-15

This accessory requires accessory communication module OPT 10.

Part no. 069 122

Communications module OPT 10

OPT 10 is used to enable connection and control of gas boiler NIBE GBM 10-15.

Part no. 067513

Outdoor air heat pump

F2030

7 kW Part no. 064 099

9 kW Part no. 064 070

F2040

F2040-8 Art nr 064 109

F2040-12 Art nr 064 092

F2120

F2120-8 1x230V
Art nr 064 134

F2120-8 3x400V
Art nr 064 135

F2120-12 1x230V
Art nr 064 136

F2120-12 3x400V
Art nr 064 137

F2120-16 3x400V
Art nr 064 139

Pool heating POOL 310

POOL 310 is an accessory that enables pool heating with VVM 320.

Part no. 067 247

Room unit RMU 40

RMU 40 means that control and monitoring of the heat pump can be carried out in a different part of the accommodation to where VVM 320 is located.

Part no. 067 064

Solar package

PV3031

3 kW

Part no. 057 116

Top cabinet

Top cabinet to conceal any pipes.

245 mm	*345 mm*
Part no. 089 756	Part no. 089 757
395-645 mm	
Part no. 089 758	

12 Technical data

Dimensions and setting-out coordinates

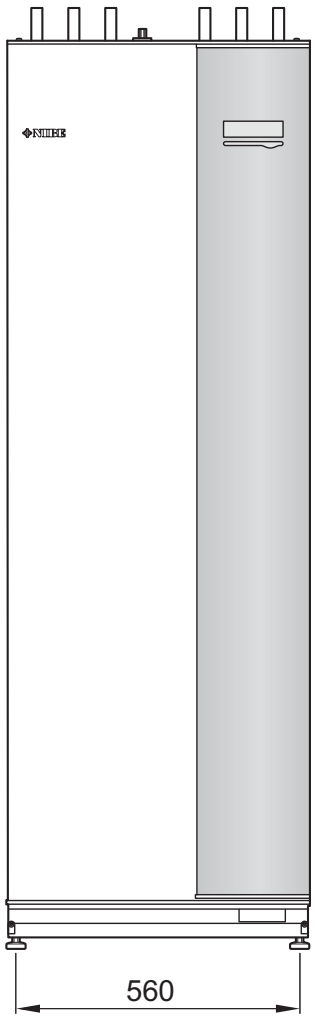

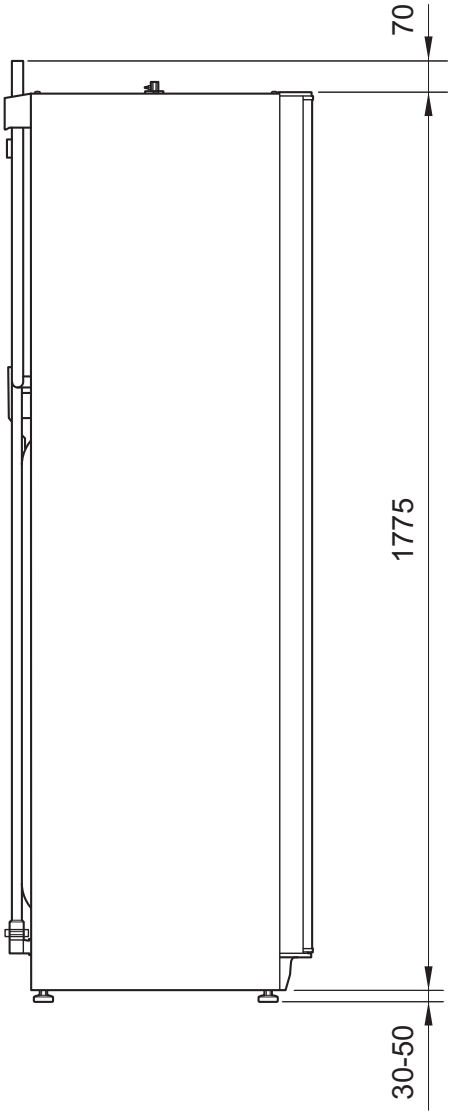

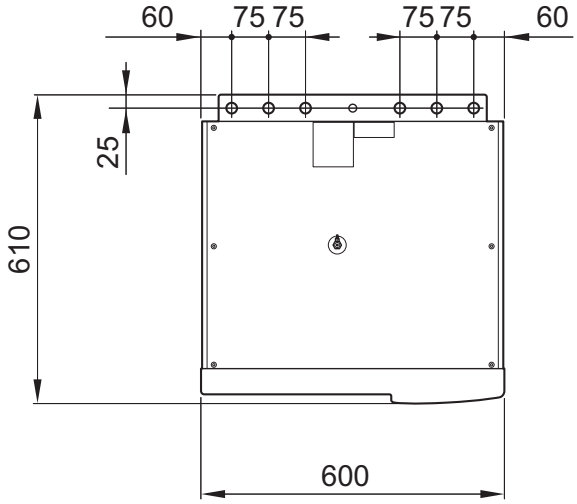

Technical specifications

IP 21

3x400V

3x400V		
Compatible external parts [1]	F2030-7 / F2030-9 F2040-8 / F2040-12 F2120-8 / F2120-12 / F2120-16	
Additional power	kW	9
Electrical data		
Rated voltage		400V 3N~50Hz
Max operating current	A	16
Fuse	A	16
Output, GP1	W	3 – 76
Output, GP6	W	3 – 45
IP class		IP 21
Heating medium circuit		
Energy class, GP1		low energy
Energy class, GP6		low energy
Max system pressure heating medium	MPa	0.25 (2.5 bar)
Min flow	litres/h	400
Max HM temp	°C	70
Pipe connections		
Heating medium	mm	Ø22
Hot water connection	mm	Ø22
Cold water connection	mm	Ø22
Heat pump connections	mm	Ø22

[1]Applies to an outdoor air heat pump at 7/45 °C (outdoor temperature/supply line temperature)

Miscellaneous		
Indoor module		
Volume, hot water heater	l	180
Volume, total indoor module	l	206
Volume buffer vessel	l	26
Cut-off pressure, hot water heater	MPa (bar)	0.9 (9 bar)
Max permitted pressure in indoor module	MPa (bar)	0.25 (2.5 bar)
Capacity hot water heating According to EN 255-3		
Tap volume 40 °C during Eco comfort	l	220
Tap volume 40 °C during Normal comfort	l	250
Tap volume 40 °C during Lux comfort	l	280
Idle loss according to DIN 4753-8	W	98
Dimensions and weight		
Width	mm	600
Depth	mm	615
Height (without base)	mm	1,800
Height (with base)	mm	1,830 – 1,850
Required ceiling height	mm	1,910
Weight (excl. packaging and without water)	kg	146
Part number Copper - VVM 320 CU		069 108
Part number Stainless steel - VVM 320 R		069 109
Part number Enamel – VVM 320 E EM		069 110

3x230V

3x230V		
Compatible external parts [1]	F2030-7 / F2030-9 F2040-8 / F2040-12 F2120-8 / F2120-12 / F2120-16	
Additional power	kW	9
Electrical data		
Rated voltage		230V 3N~50Hz
Max operating current	A	27.5
Fuse	A	32
Output, GP1	W	3 – 76
Output, GP6	W	3 – 45
IP class		IP 21
Heating medium circuit		
Energy class, GP1		low energy
Energy class, GP6		low energy
Max system pressure heating medium	MPa	0.25 (2.5 bar)
Min flow	litres/h	400
Max HM temp	°C	70
Pipe connections		
Heating medium		Ø22
Hot water connection		Ø22
Cold water connection		Ø22
Heat pump connections		Ø22

[1]Applies to an outdoor air heat pump at 7/45 °C (outdoor temperature/supply line temperature)

Miscellaneous		
Indoor module		
Volume, hot water heater	l	180
Volume, total indoor module	l	206
Volume buffer vessel	l	26
Cut-off pressure, hot water heater	MPa (bar)	1.0 (10 bar)
Max permitted pressure in indoor module	MPa (bar)	0.25 (2.5 bar)
Capacity hot water heating **According to EN 255-3**		
Tap volume 40 °C during Eco comfort	l	220
Tap volume 40 °C during Normal comfort	l	250
Tap volume 40 °C during Lux comfort	l	280
Idle loss according to DIN 4753-8	W	98
Dimensions and weight		
Width	mm	600
Depth	mm	615
Height (without base)	mm	1,800
Height (with base)	mm	1,830 – 1,850
Required ceiling height	mm	1,910
Weight (excl. packaging and without water)	kg	146
Part number Stainless steel - VVM 320 3x230V R		069 113

1x230V

1x230V		
Compatible external parts [1]	F2030-7 / F2030-9 F2040-8 / F2040-12 F2120-8 / F2120-12 / F2120-16	
Additional power	kW	7
Electrical data		
Rated voltage		230V~50Hz
Max operating current	A	32
Fuse	A	32
Output, GP1	W	3 – 76
Output, GP6	W	3 – 45
IP class		IP 21
Heating medium circuit		
Energy class, GP1		low energy
Energy class, GP6		low energy
Max system pressure heating medium	MPa	0.25 (2.5 bar)
Min flow	litres/h	400
Max HM temp	°C	70
Pipe connections		
Heating medium		Ø22
Hot water connection		Ø22
Cold water connection		Ø22
Heat pump connections		Ø22

[1] Applies to an outdoor air heat pump at 7/45 °C (outdoor temperature/supply line temperature)

Miscellaneous		
Indoor module		
Volume, hot water heater	l	180
Volume, total indoor module	l	206
Volume buffer vessel	l	26
Cut-off pressure, hot water heater	MPa (bar)	0.9 (9 bar)
Max permitted pressure in indoor module	MPa (bar)	0.25 (2.5 bar)
Capacity hot water heating **According to EN 255-3**		
Tap volume 40 °C during Eco comfort	l	220
Tap volume 40 °C during Normal comfort	l	250
Tap volume 40 °C during Lux comfort	l	280
Idle loss according to DIN 4753-8	W	98
Dimensions and weight		
Width	mm	600
Depth	mm	615
Height (without base)	mm	1,800
Height (with base)	mm	1,830 – 1,850
Required ceiling height	mm	1,910
Weight (excl. packaging and without water)	kg	146
Part number Stainless steel - VVM 320 1x230V R		069 111

Electrical circuit diagram, 3 x 400V

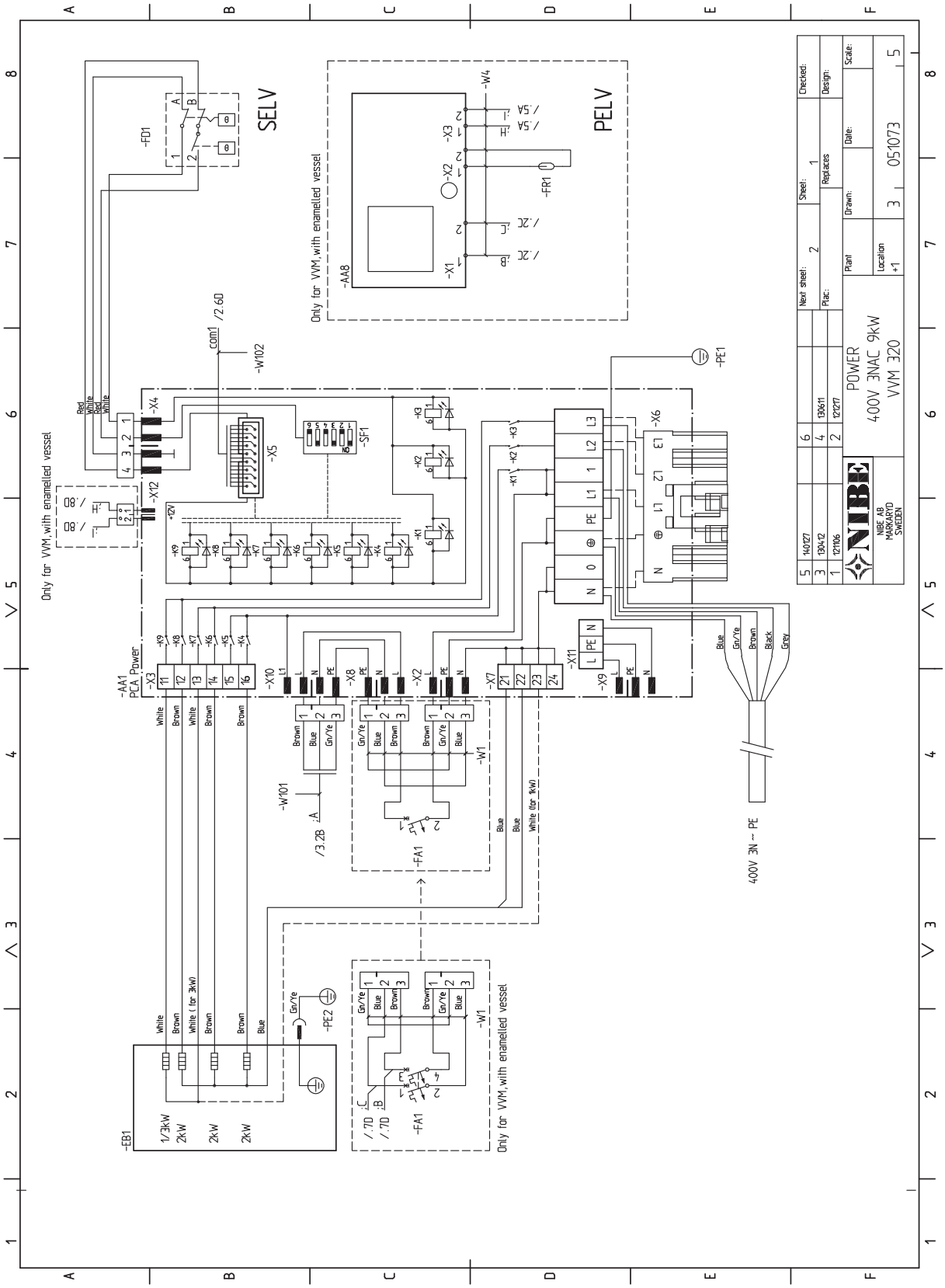

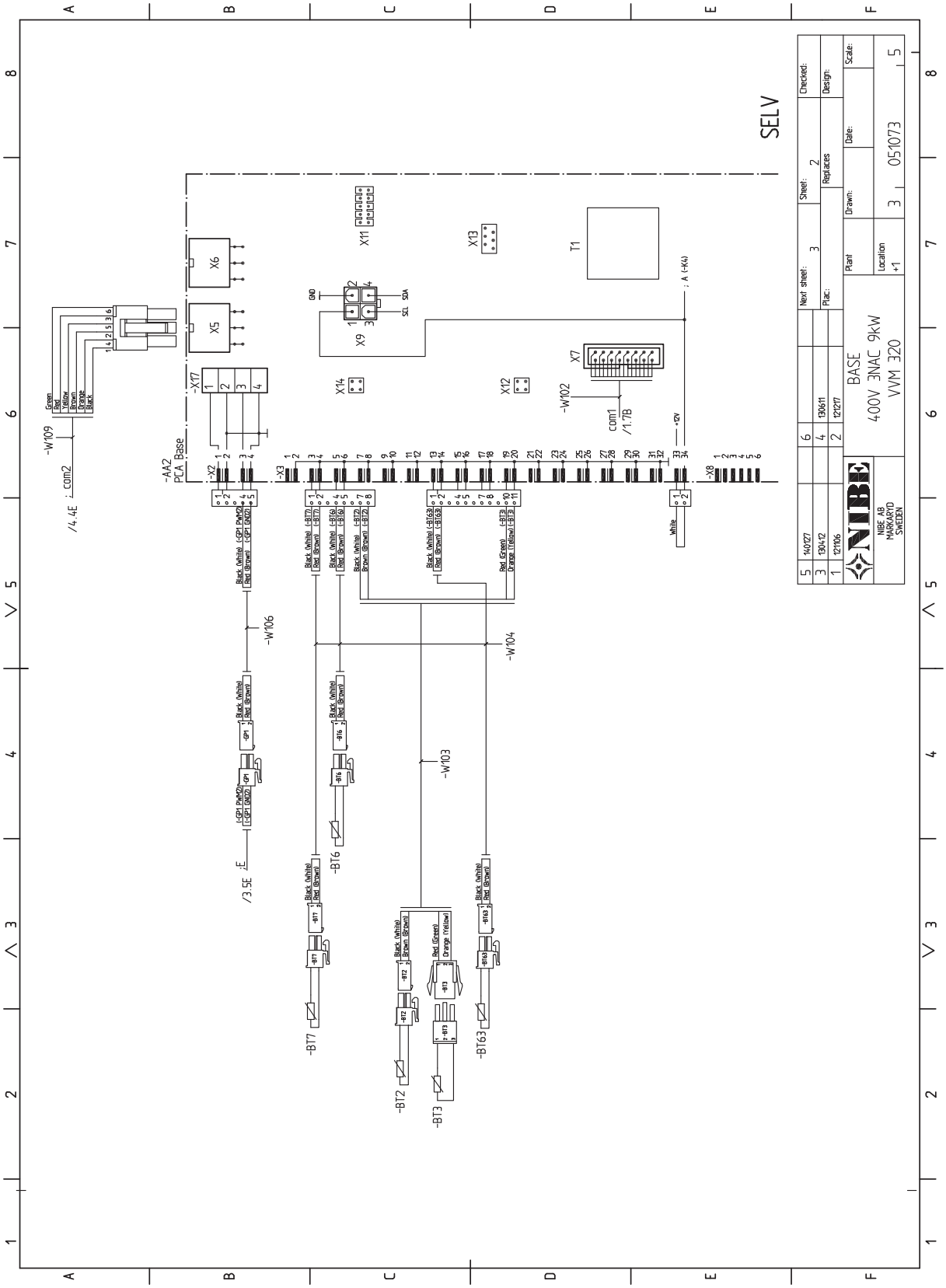
SELV
BASE
400V 3NAC 9kW
VVM 320
051073
NIBE AB
MARKNADSVÄGEN
SWEDEN
-AA2
PCA Base
-W109
-W106
-W104
-W103
-W102
-BT7
-BT6
-BT2
-BT3
-BT63
X5
X6
X7
X9
X11
X12
X13
X14
T1
-X17
-X2
-X3
-X8
GND
SDA
SCL
+12V
White
Green
Red
Yellow
Brown
Orange
Black
Black (White)
Red (Brown)
Brown (Brown)
Red (Green)
Orange (Yellow)
-GP1 PWM(2)
-GP1 GND(2)
-GP1
/4.4E ; com2
/3.5E ;E
com1
/1.7B
; A (-K4)
Checked:
Design:
Scale:
Sheet: 2
Replaces
Date:
Drawn:
Plant
Location +1
Next sheet: 3
Plac:
5 140277
3 130412
1 121106
6
4 130611
2 121217

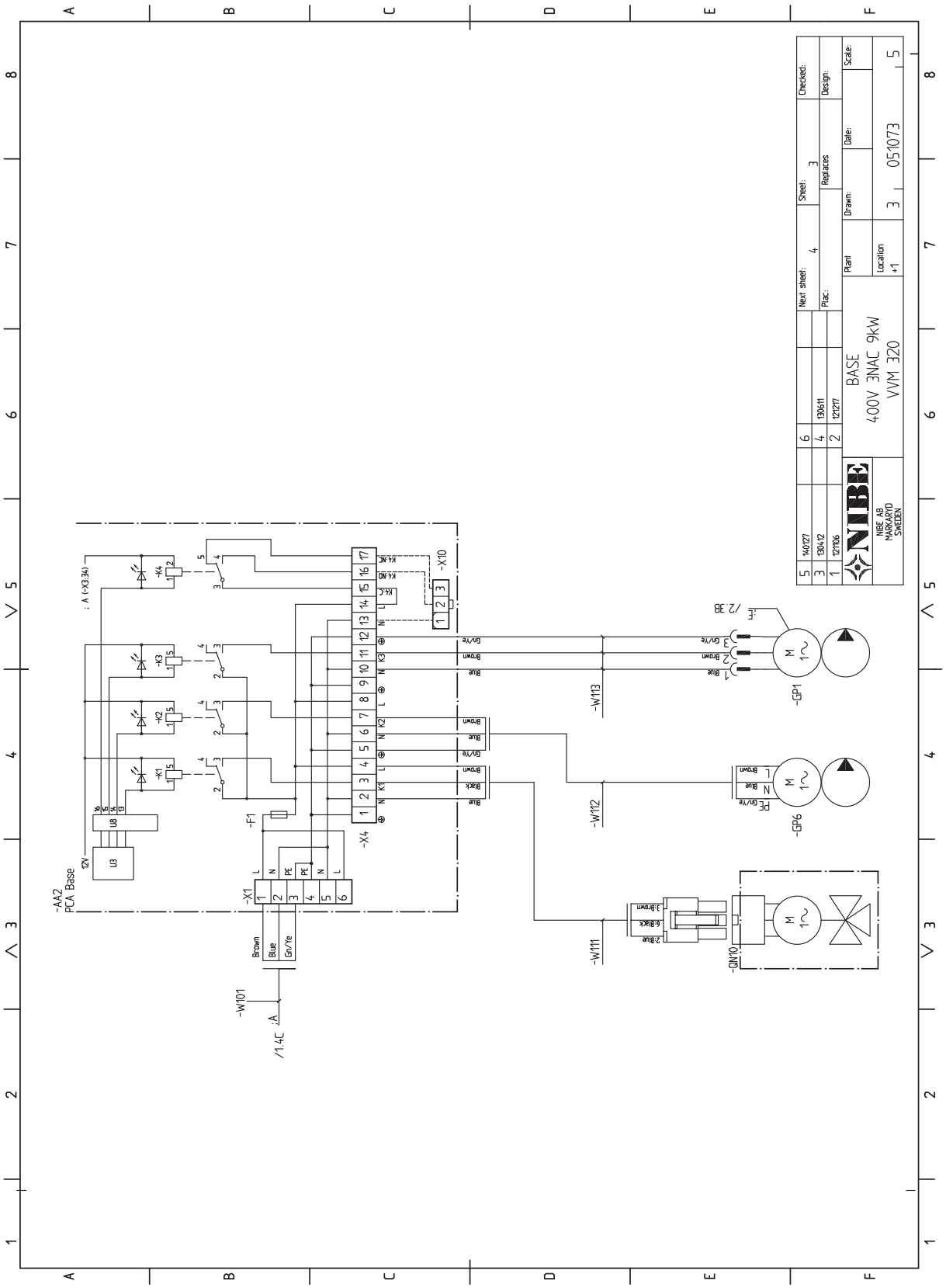
-AA2
PCA Base
12V
U3
U8
-K1
-K2
-K3
-K4
-F1
-X1
-X4
-X10
-W101
-W111
-W112
-W113
-GP1
-GP6
-QN10
Brown
Blue
Gn/Ye
Black
NIBE AB
MARKARYD
SWEDEN
BASE
400V 3NAC 9kW
VVM 320
051073

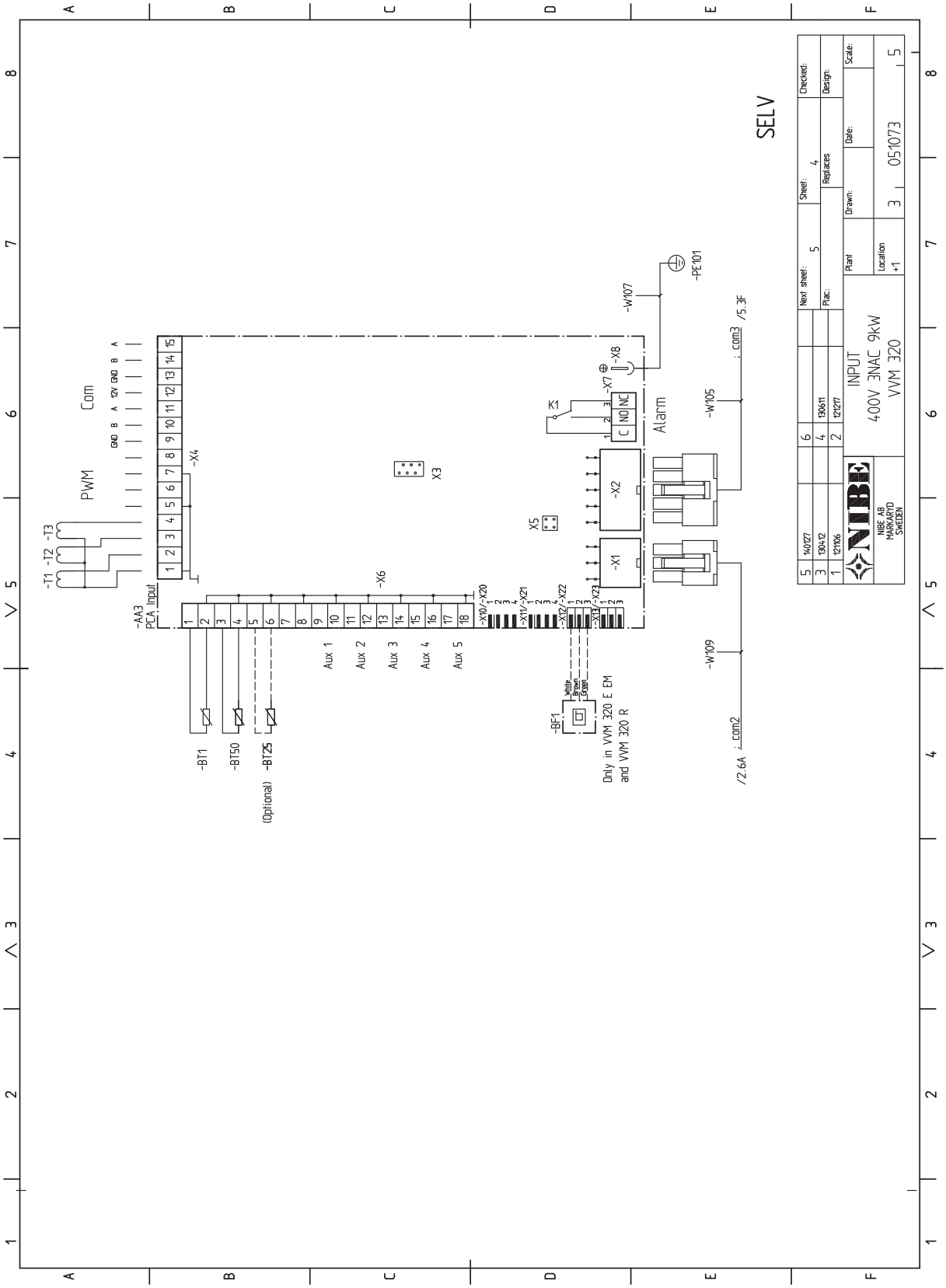
SELV
PWM
Com
-T1 -T2 -T3
-X4
-AA3
PCA Input
-X6
Aux 1
Aux 2
Aux 3
Aux 4
Aux 5
-BT1
-BT50
(Optional) -BT25
-X10/-X20
-X11/-X21
-X12/-X22
-X13/-X23
-BF1
Only in VVM 320 E EM
and VVM 320 R
X3
X5
-X1
-X2
-X7
-X8
K1
C NO NC
Alarm
-W107
-PE101
-W105
-W109
/5.3F : com3
/2.6A : com2
INPUT
400V 3NAC 9kW
VVM 320
NIBE AB
MARKNADSVÄGEN
SWEDEN
Next sheet: 5
Sheet: 4
Replaces
Plant
Drawn:
Date:
Checked:
Design:
Scale:
Location +1
051073

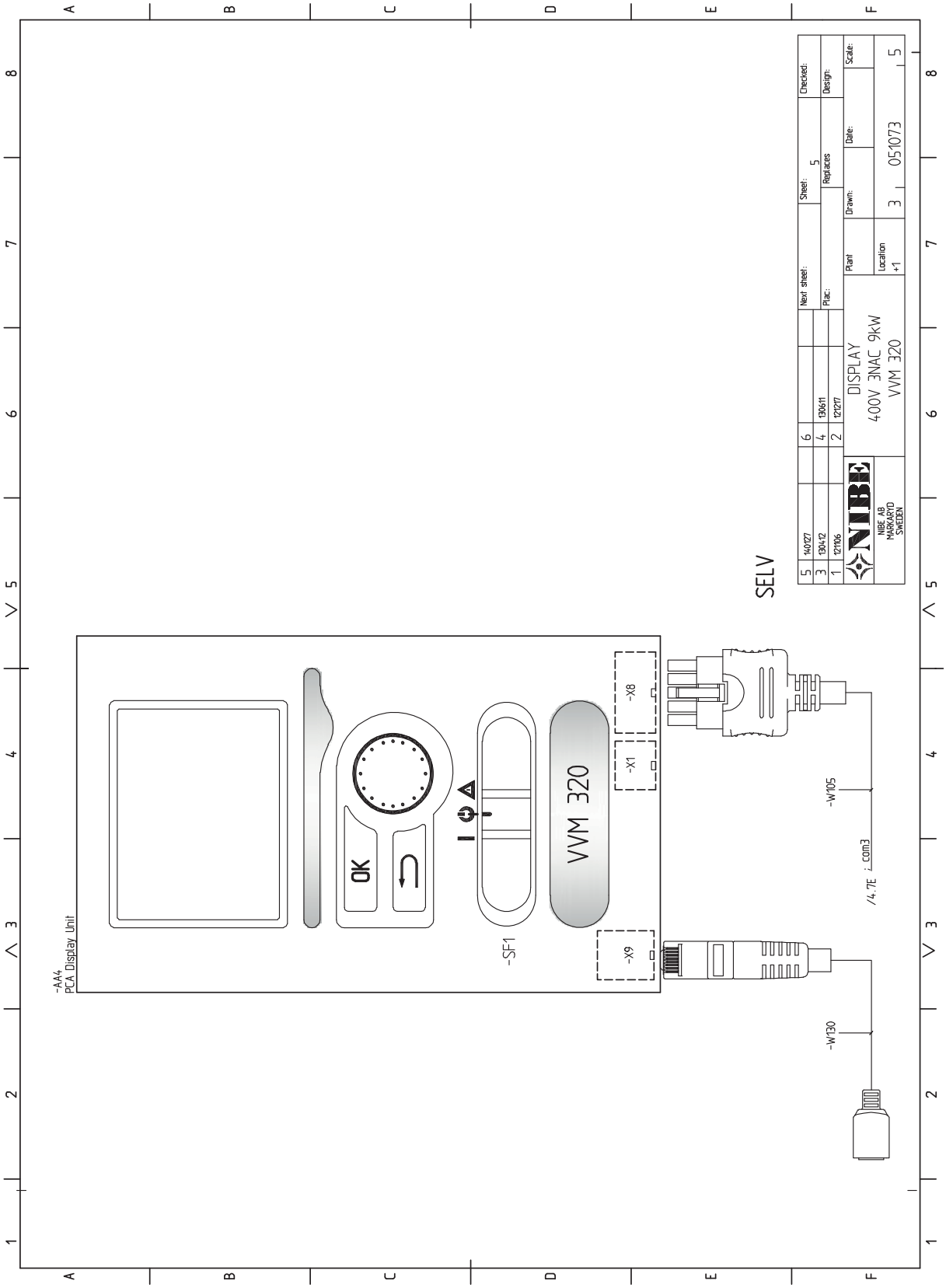
-AA4
PCA Display Unit
OK
-SF1
VVM 320
-X8
-X1
-X9
-W105
/4.7E i com3
-W130
SELV
5 140127
3 130412
1 121106
6
4 130611
2 121217
Next sheet:
Plac:
Sheet: 5
Replaces
Checked:
Design:
NIBE
NIBE AB
MARKARYD
SWEDEN
DISPLAY
400V 3NAC 9kW
VVM 320
Plant
Location
+1
Drawn:
Date:
Scale:
3 051073 5

Electrical circuit diagram, 3 x 230V

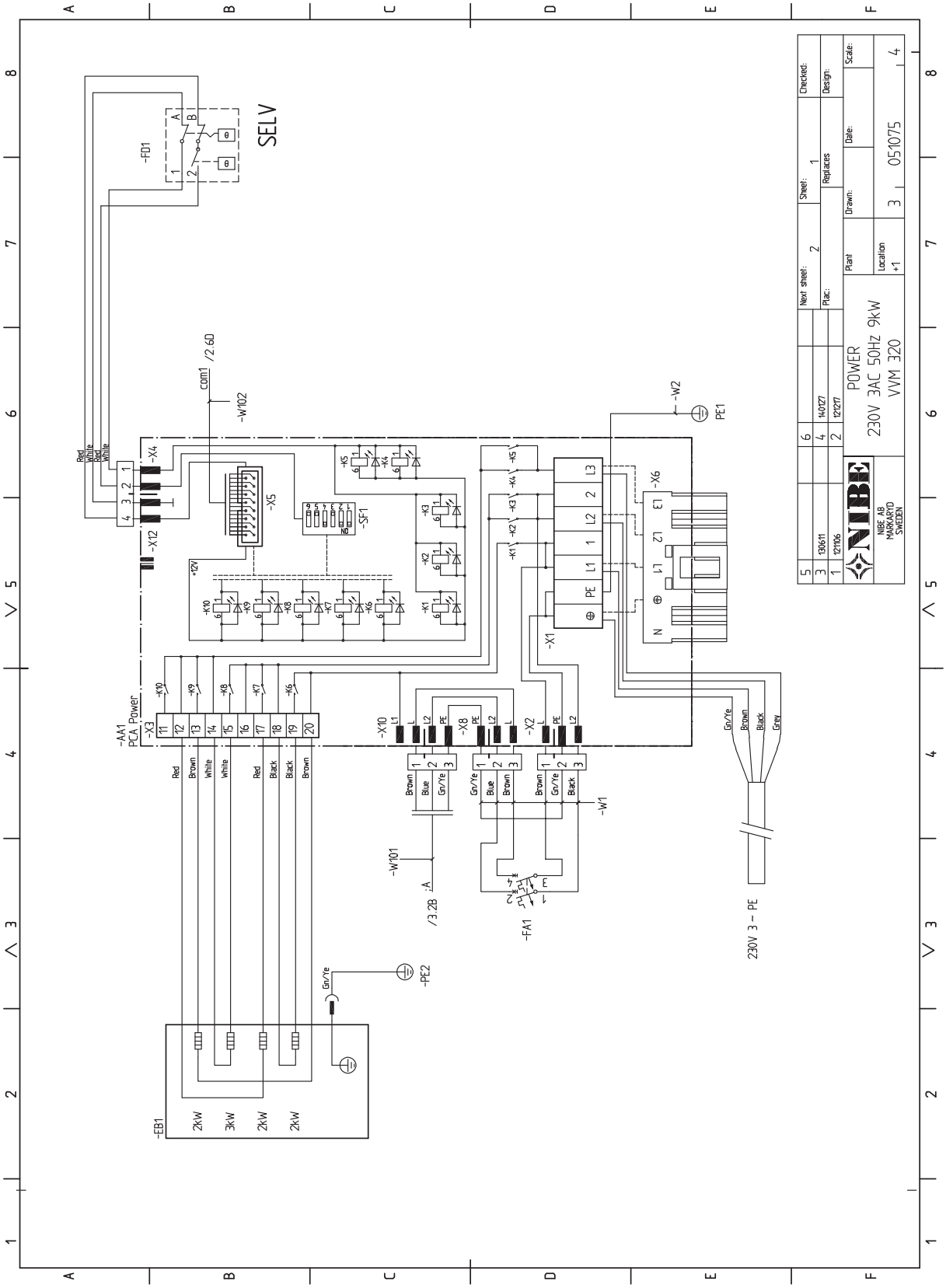

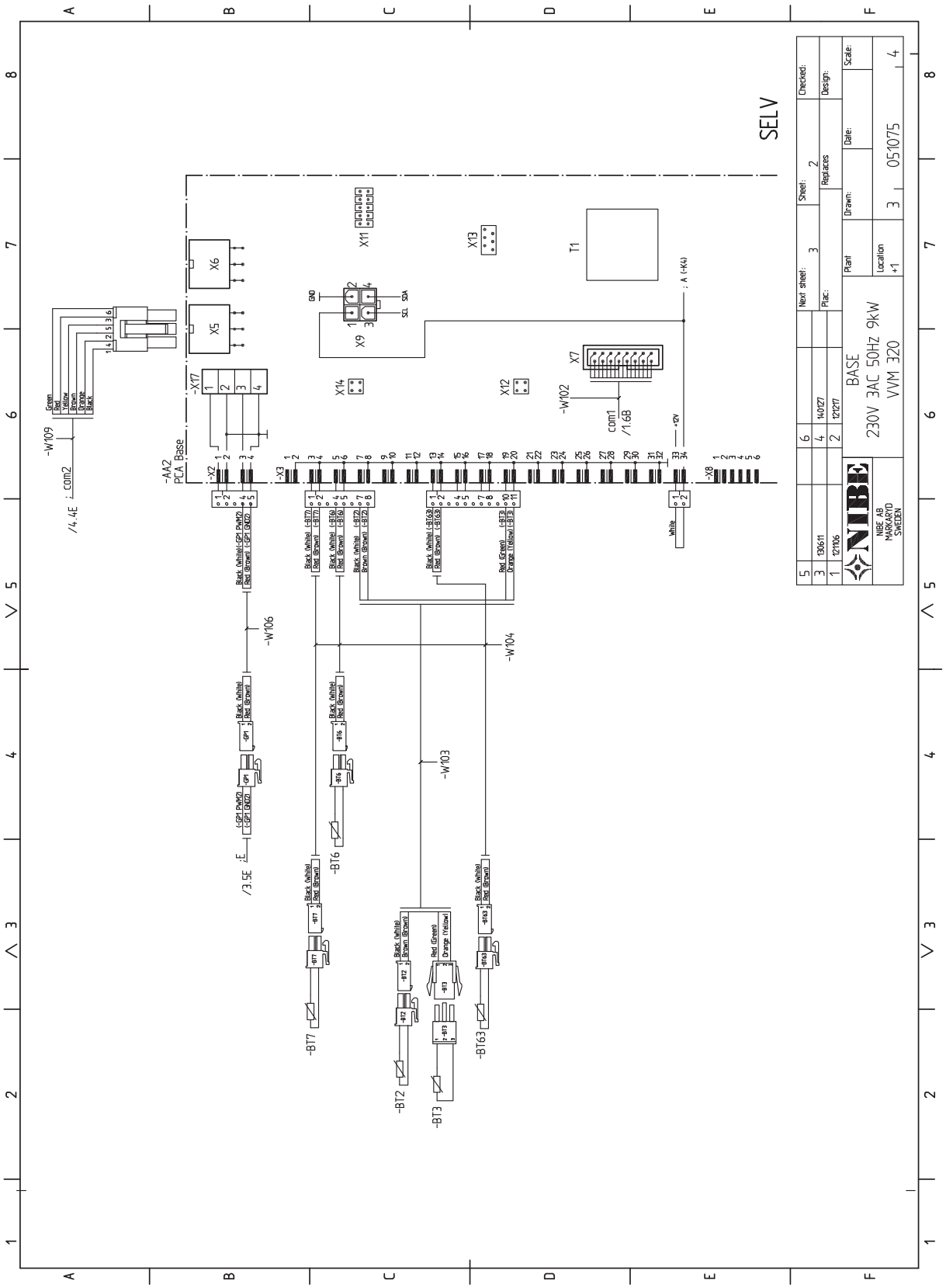
SELV
BASE
230V 3AC 50Hz 9kW
VVM 320
NIBE AB
MARKARYD
SWEDEN
-AA2
PCA Base
-W109
-W106
-W104
-W103
-W102
-BT7
-BT6
-BT2
-BT3
-BT63
X1
X2
X3
X5
X6
X7
X8
X9
X11
X12
X13
X14
X17
T1
-GP1
com1
/1.6B
/4.4E
/3.5E
Green
Blue
Yellow
Brown
Orange
Black
Black (White)
Red (Brown)
Red (Green)
Orange (Yellow)
White
Checked:
Design:
Scale:
Sheet:
Replaces
Next sheet:
Plac:
Plant
Drawn:
Date:
Location
+1
051075

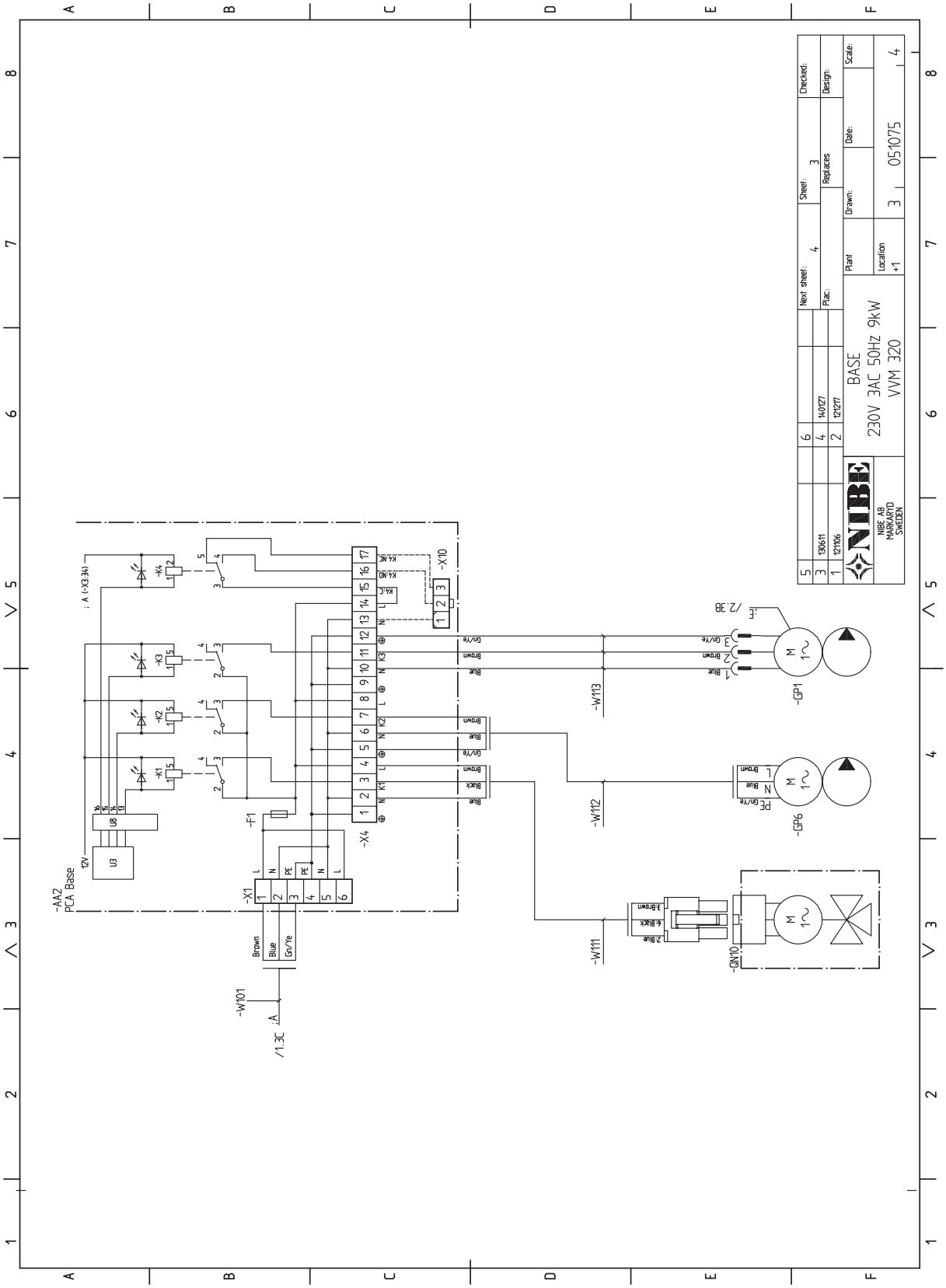
-AA2
PCA Base
-X1
-X4
-X10
-F1
-K1
-K2
-K3
-K4
U3
U8
-W101
/1.3C :A
-W111
-W112
-W113
-QN10
-GP1
-GP6
/2.3B
Brown
Blue
Gn/Ye
Black
NIBE AB
MARKNADSVÄGEN
SWEDEN
BASE
230V 3AC 50Hz 9kW
VVM 320
051075
Next sheet:
Sheet:
Checked:
Plac:
Replaces
Design:
Plant
Drawn:
Date:
Scale:
Location
+1

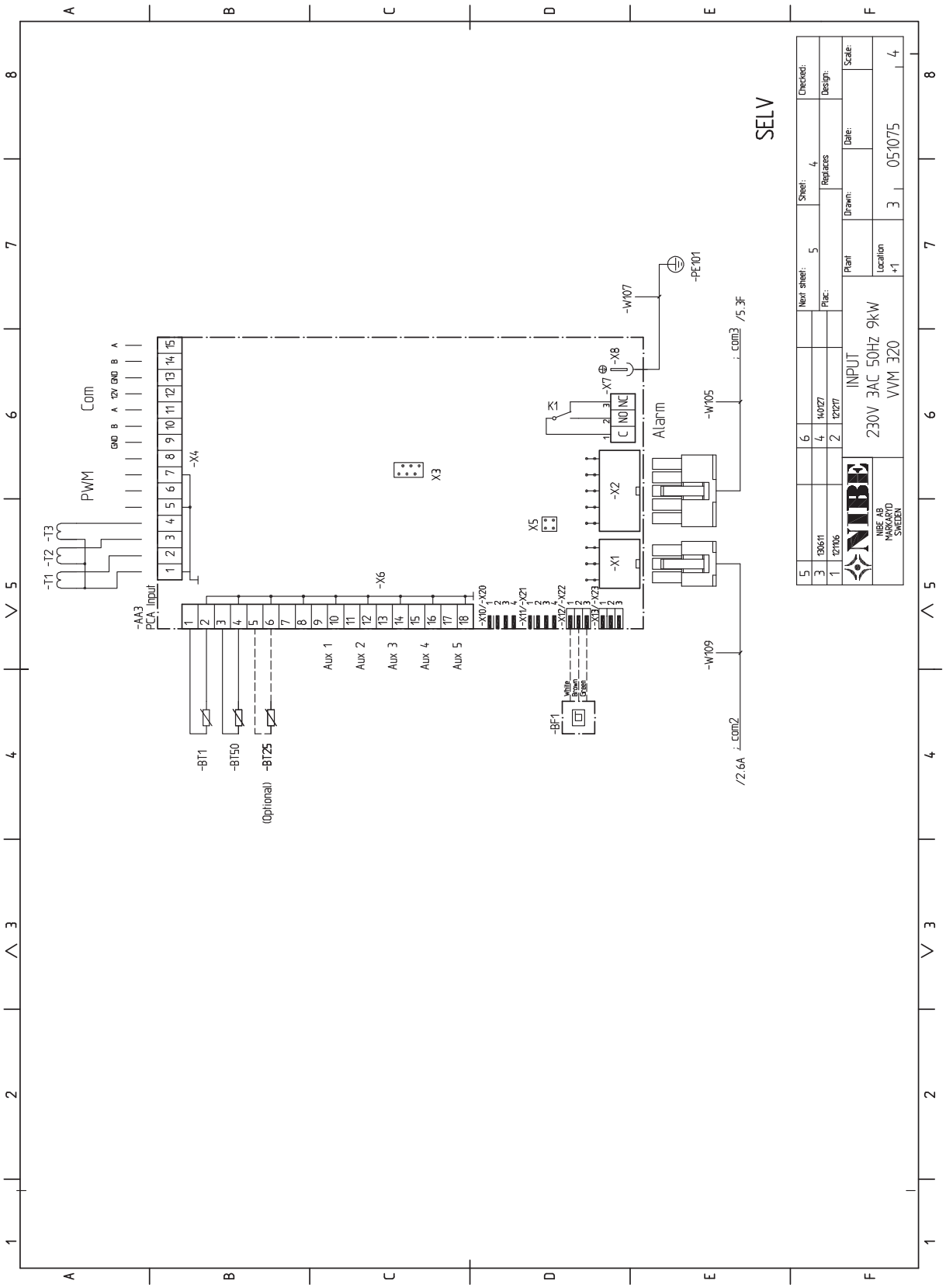
SELV
PWM
Com
GND B A 12V GND B A
-T1 -T2 -T3
-X4
-AA3
PCA Input
-X6
Aux 1
Aux 2
Aux 3
Aux 4
Aux 5
-BT1
-BT50
(Optional) -BT25
-BF1
White
Brown
Green
-X10/-X20
-X11/-X21
-X12/-X22
-X13/-X23
X3
X5
-X1
-X2
-X7
-X8
K1
C NO NC
Alarm
-W107
-PE101
-W105
-W109
/5.3F
: com3
/2.6A
: com2
Next sheet: 5
Plac:
Sheet: 4
Replaces
Checked:
Design:
Plant
Drawn:
Date:
Scale:
Location +1
INPUT
230V 3AC 50Hz 9kW
VVM 320
NIBE AB
MARKARYD
SWEDEN
051075

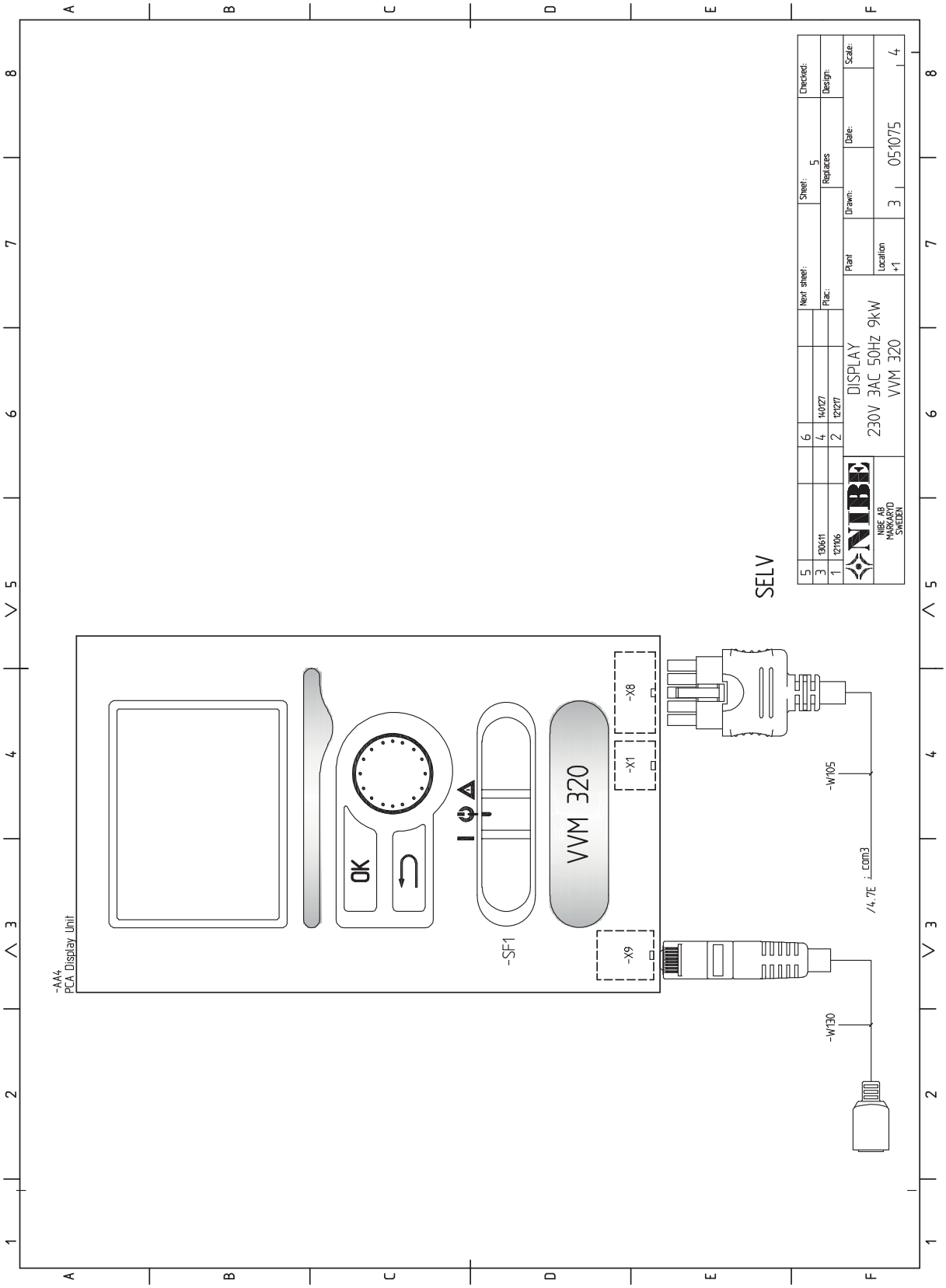
-AA4
PCA Display Unit
OK
-SF1
VVM 320
-X8
-X1
-X9
-W105
/4,7E ; com3
-W130
SELV
Next sheet:
Plac:
Sheet: 5
Replaces
Checked:
Design:
Drawn:
Date:
Scale:
Plant
Location
+1
DISPLAY
230V 3AC 50Hz 9kW
VVM 320
NIBE AB
NÄNÄSVÄGEN
SWEDEN
051075

Electrical circuit diagram, 1 x 230V

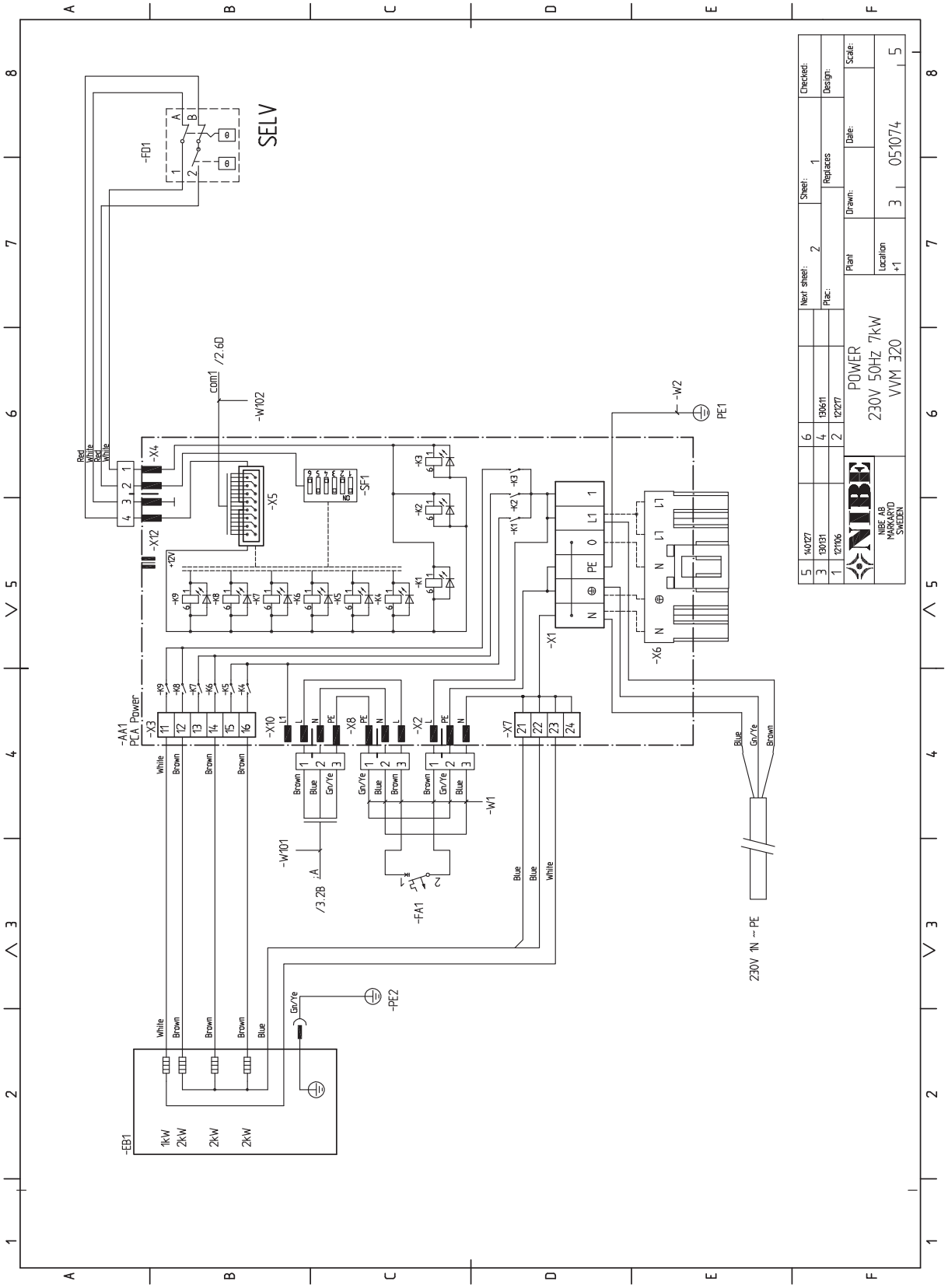

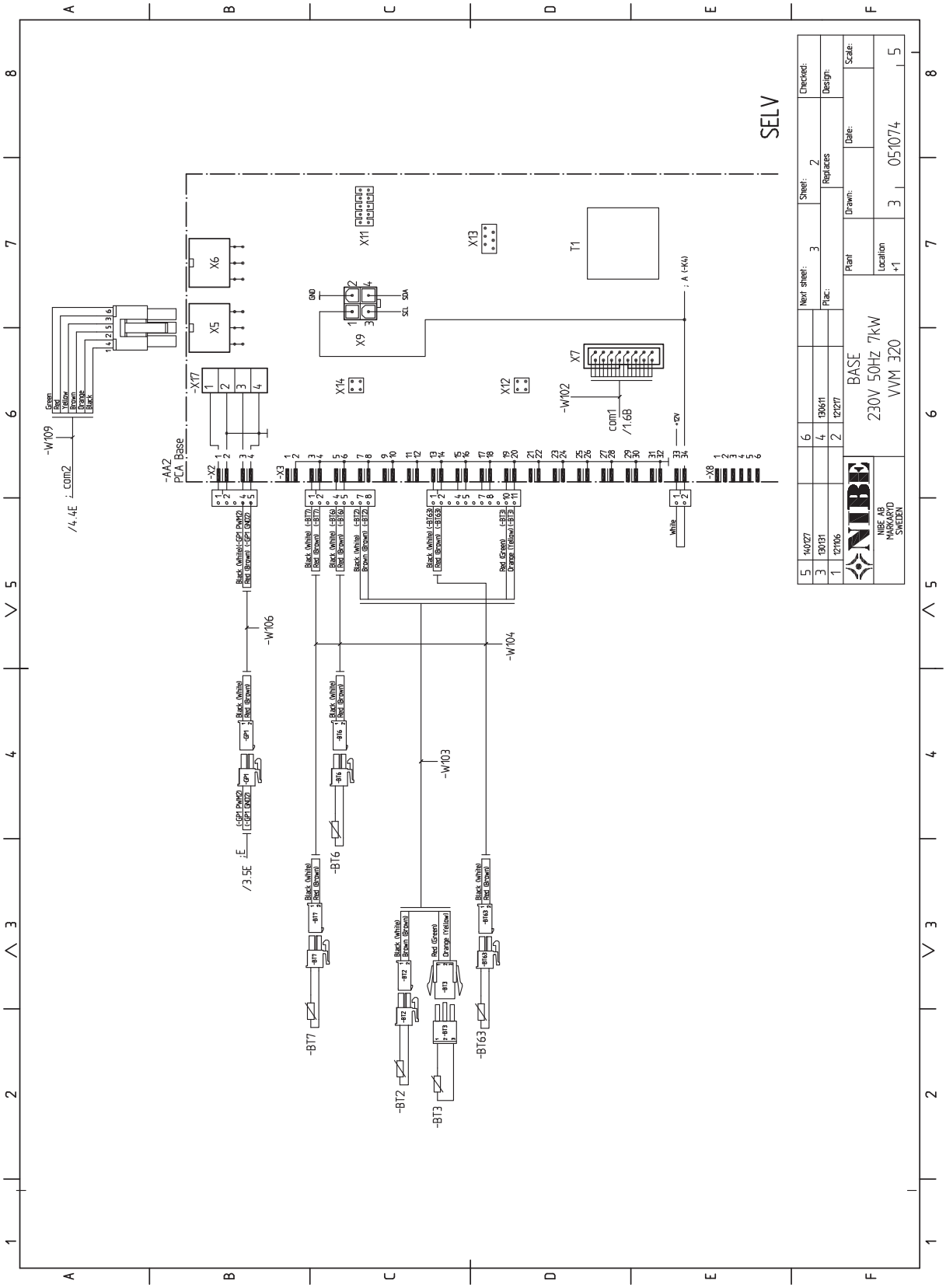
SELV
BASE
230V 50Hz 7kW
VVM 320
NIBE AB
NYMANSVÄGEN
SWEDEN
051074
-AA2
PCA Base
-W109
-W106
-W104
-W103
-W102
-BT7
-BT2
-BT3
-BT63
-BT6
-GP1
-X2
-X3
-X8
-X17
X5
X6
X7
X9
X11
X12
X13
X14
T1
com1
/1.6B
com2
/4.4E
/3.5E
+12V
GND
SDA
SCL
Black (White)
Red (Brown)
Brown (Brown)
Red (Green)
Orange (Yellow)
White
Green
Red
Yellow
Brown
Orange
Black

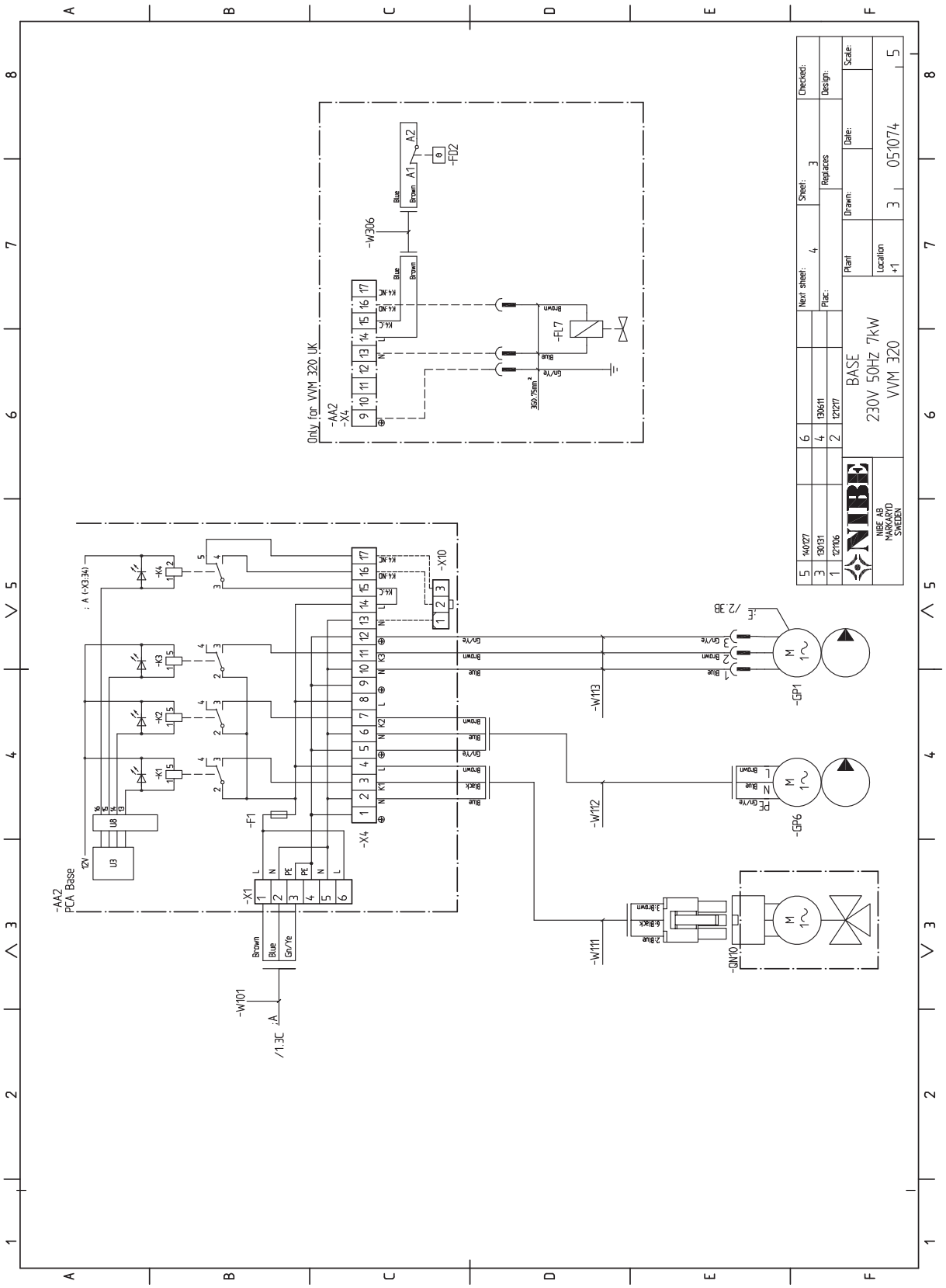
Only for VVM 320 UK
-AA2
-X4
-W306
-FD2
-FL7
-AA2
PCA Base
-X1
-F1
-X4
-X10
-W101
-W111
-W112
-W113
-GP1
-GP6
-QN10
BASE
230V 50Hz 7kW
VVM 320
NIBE AB
MARKARYD
SWEDEN
051074

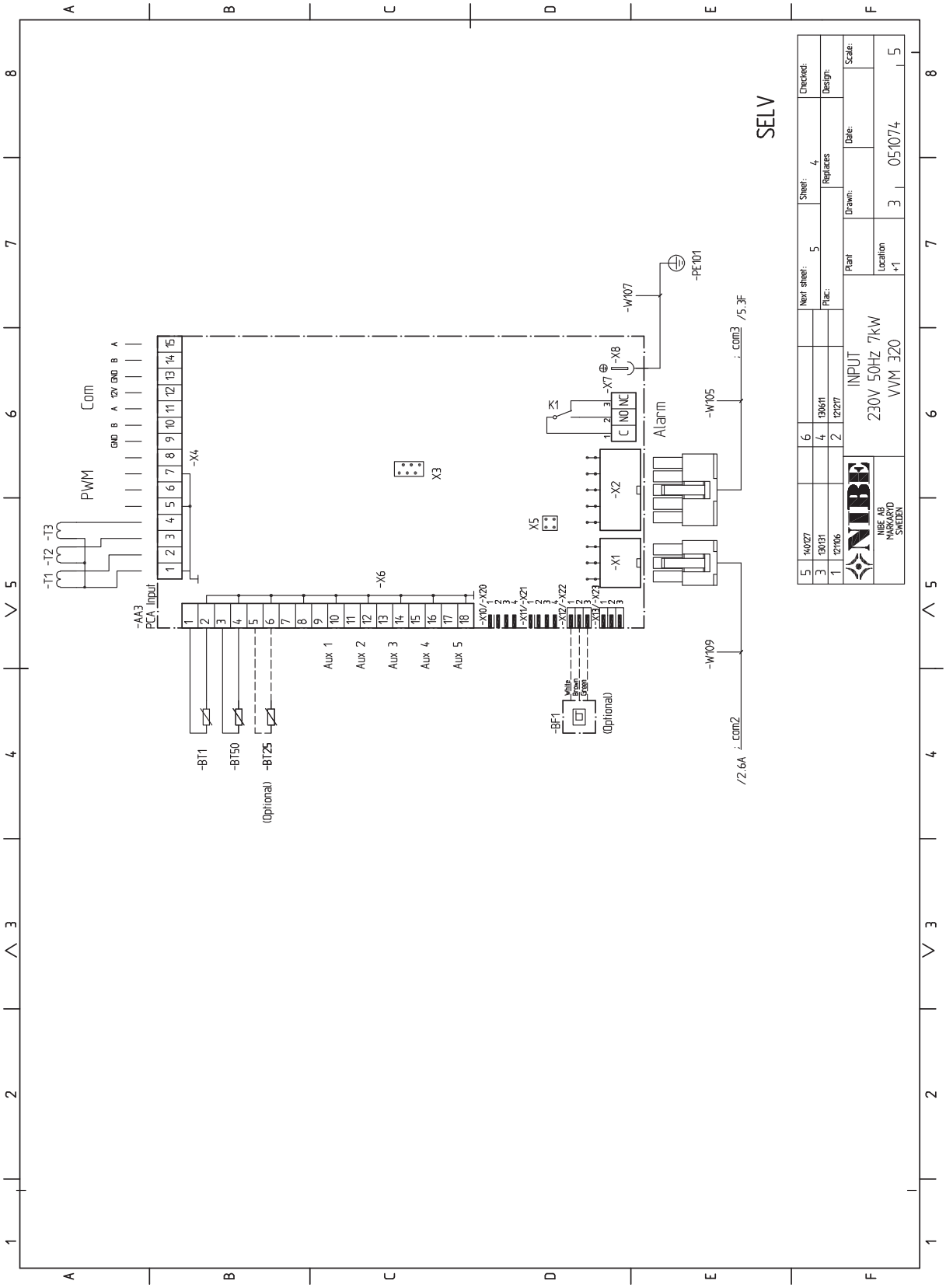
SELV
INPUT
230V 50Hz 7kW
VVM 320
NIBE AB
MARKNADSVÄGEN
SWEDEN
Alarm
PWM
Com
-AA3
PCA Input
-X4
-X6
-X1
-X2
X3
X5
K1
-X7
-X8
-W107
-PE101
-W105
-W109
/5.3F
: com3
/2.6A
: com2
-T1
-T2
-T3
-BT1
-BT50
-BT25
(Optional)
-BF1
(Optional)
Aux 1
Aux 2
Aux 3
Aux 4
Aux 5
Next sheet:
Plac:
Plant
Location
+1
Sheet:
Replaces
Drawn:
Date:
Checked:
Design:
Scale:
0510174

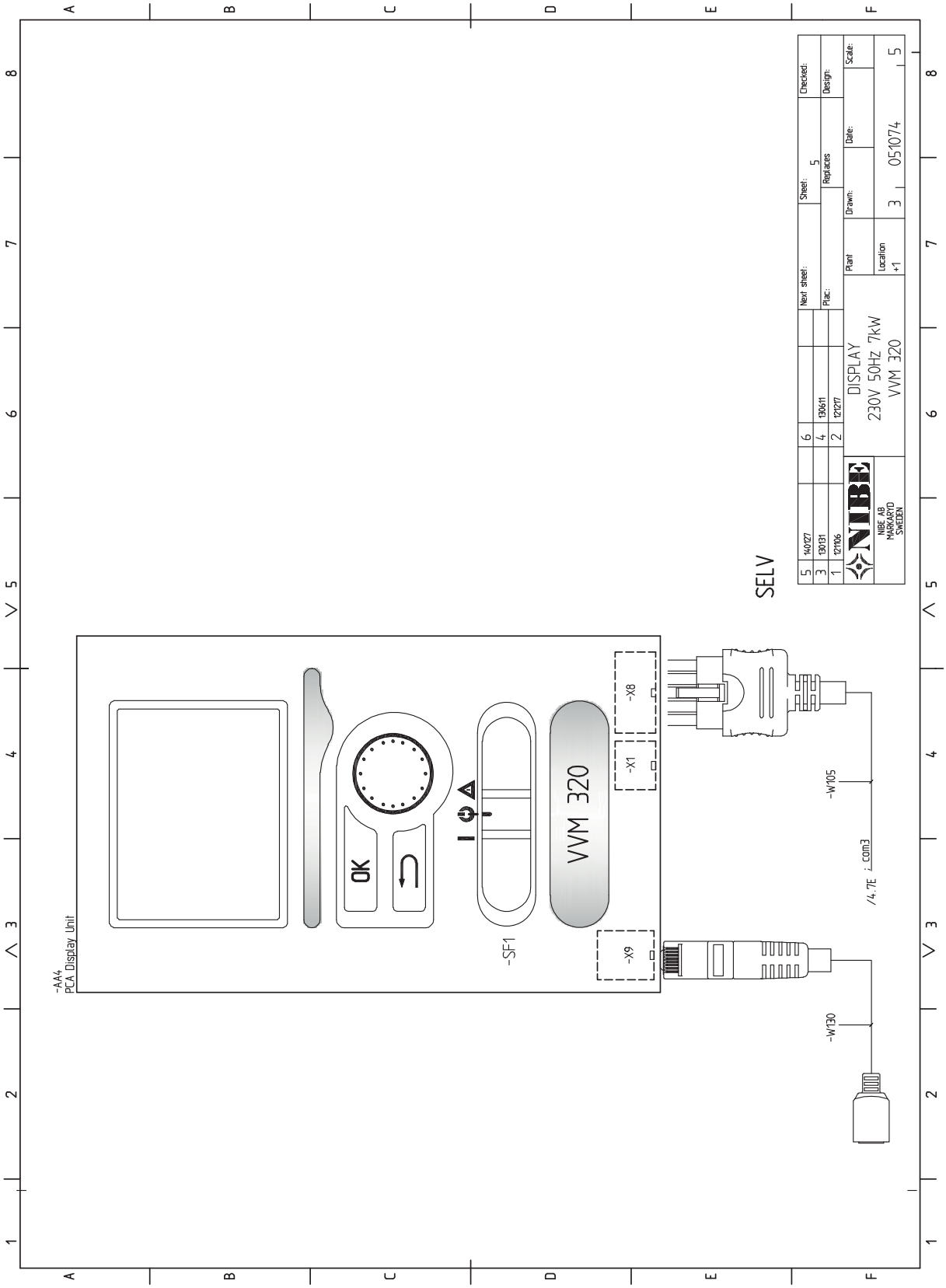
-AA4
PCA Display Unit
OK
-SF1
VVM 320
-X8
-X1
-X9
-W105
/4.7E i com3
-W130
SELV
5 140127
3 130131
1 121106
6
4 130611
2 121217
Next sheet:
Plac:
Sheet: 5
Replaces
Checked:
Design:
NIBE
NIBE AB
MARKARYD
SWEDEN
DISPLAY
230V 50Hz 7kW
VVM 320
Plant
Location
+1
Drawn:
Date:
Scale:
3 051074 5

13 Item register

Item register

NIBE AB Sweden
Hannabadsvägen 5
Box 14
SE-285 21 Markaryd
info@nibe.se
www.nibe.eu

231357