Installer manual

NIBE™ F2040

8, 12, 16 kW

Air/water heat pump

IHB GB 1540-5
231844

Table of Contents

1 Important information 2
Safety information 2

2 Delivery and handling 6
Transport and storage 6
Assembly 6
Supplied components 8
Removing the covers 9
Removing the front panel 9
Removing the side panel 10

3 The heat pump design 11
General 11
Electrical connection 16

4 Pipe connections 19
General 19
Pipe coupling heating medium circuit 19
Docking alternatives 21

5 Electrical connections 22
General 22
Connections 24

6 Commissioning and adjusting 30
Preparations 30
Filling and venting the heating medium system 30
Compressor heater 30
Start-up and inspection 31
Readjusting, heating medium side 32
Adjustment, charge flow 33

7 Control 34

8 Disturbances in comfort 35
Troubleshooting 35

9 Alarm list 39

10 Accessories 42

11 Technical data 44
Dimensions and setting-out coordinates 44
Sound pressure levels 46
Technical specifications 47
Energy labelling 54
Electrical circuit diagram 58

Index 64

1 Important information

Safety information

This manual describes installation and service procedures for implementation by specialists.

This appliance can be used by children aged from 8 years and above and persons with reduced physical, sensory or mental capabilities or lack of experience and knowledge if they have been given supervision or instruction concerning use of the appliance in a safe way and understand the hazards involved. Children shall not play with the appliance. Cleaning and user maintenance shall not be made by children without supervision.

Rights to make any design or technical modifications are reserved.

©NIBE 2015.

Symbols

NOTE
This symbol indicates danger to machine or person.

Caution
This symbol indicates important information about what you should observe when maintaining your installation.

TIP
This symbol indicates tips on how to facilitate using the product.

Marking

The CE marking means that NIBE ensures that the product meets all regulations that are placed on it based on relevant EU directives. The CE mark is obligatory for most products sold in the EU, regardless where they are made.

Serial number

The serial number for F2040 can be found on the side of the foot.

F2040-8

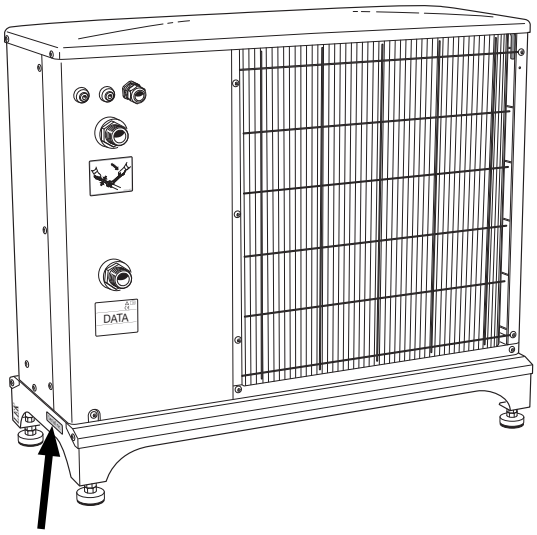

Serial number

F2040-12

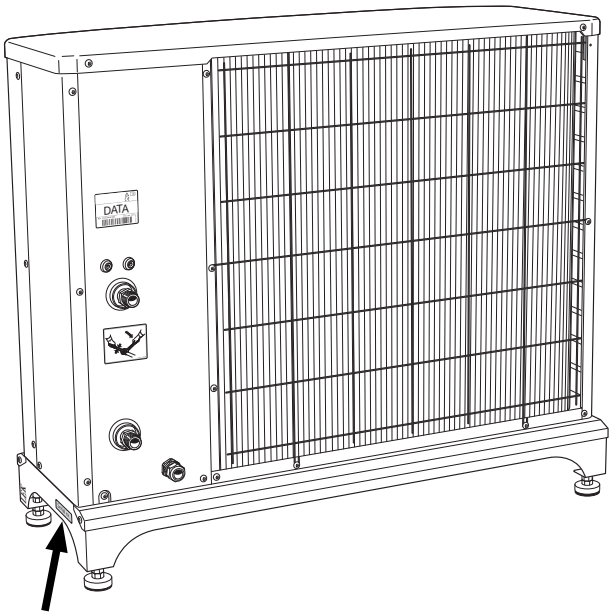

Serial number

F2040-16

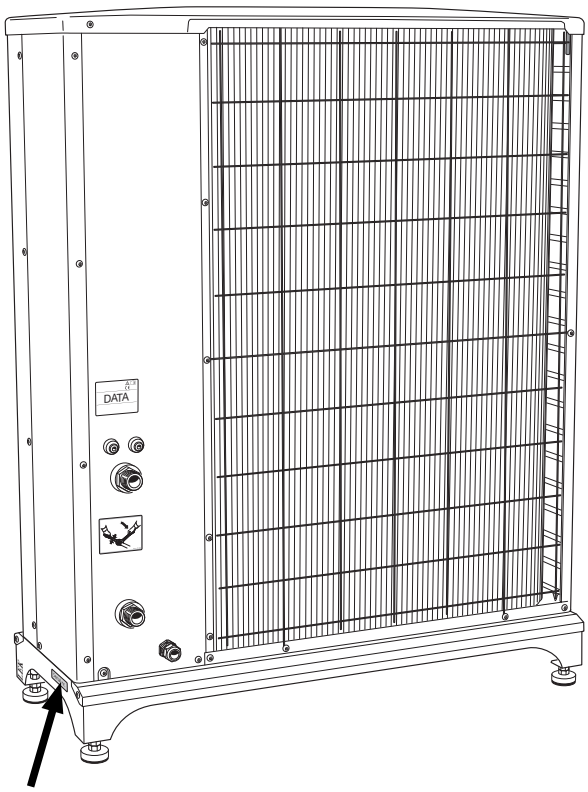

Caution

Always give the product's serial number when reporting a fault.

Country specific information

Installer manual

This installer manual must be left with the customer.

Inspection of the installation

Current regulations require the heating installation to be inspected before it is commissioned. The inspection must be carried out by a suitably qualified person. Fill in the page for information about installation data in the User manual.

✔	Description	Notes	Signature	Date
	System flushed			
	System vented			
	Particle filter			
	Shut-off and drain valve			
	Charge flow set			
	Fuses property			
	Safety breaker			
	Communication cable connected			
	F2040 addressed (only when cascade connection)			
Miscellaneous				

Contact information

AT **KNV Energietechnik GmbH**, Gahberggasse 11, 4861 Schörfling
Tel: +43 (0)7662 8963-0 Fax: +43 (0)7662 8963-44 E-mail: mail@knv.at www.knv.at

CH **NIBE Wärmetechnik c/o ait Schweiz AG**, Industriepark, CH-6246 Altishofen
Tel: (52) 647 00 30 Fax: (52) 647 00 31 E-mail: info@nibe.ch www.nibe.ch

CZ **Druzstevni zavody Drazice s.r.o**, Drazice 69, CZ - 294 71 Benatky nad Jizerou
Tel: +420 326 373 801 Fax: +420 326 373 803 E-mail: nibe@nibe.cz www.nibe.cz

DE **NIBE Systemtechnik GmbH**, Am Reiherpfahl 3, 29223 Celle
Tel: 05141/7546-0 Fax: 05141/7546-99 E-mail: info@nibe.de www.nibe.de

DK **Vølund Varmeteknik A/S**, Member of the Nibe Group, Brogårdsvej 7, 6920 Videbæk
Tel: 97 17 20 33 Fax: 97 17 29 33 E-mail: info@volundvt.dk www.volundvt.dk

FI **NIBE Energy Systems OY**, Juurakkotie 3, 01510 Vantaa
Puh: 09-274 697 0 Fax: 09-274 697 40 E-mail: info@nibe.fi www.nibe.fi

FR **NIBE Energy Systems France Sarl,** Zone industrielle RD 28, Rue du Pou du Ciel, 01600 Reyrieux
Tel : 04 74 00 92 92 Fax : 04 74 00 42 00 E-mail: info@nibe.fr www.nibe.fr

GB **NIBE Energy Systems Ltd**, 3C Broom Business Park, Bridge Way, Chesterfield S41 9QG
Tel: 0845 095 1200 Fax: 0845 095 1201 E-mail: info@nibe.co.uk www.nibe.co.uk

NL **NIBE Energietechniek B.V.**, Postbus 634, NL 4900 AP Oosterhout
Tel: 0168 477722 Fax: 0168 476998 E-mail: info@nibenl.nl www.nibenl.nl

NO **ABK AS**, Brobekkveien 80, 0582 Oslo, Postadresse: Postboks 64 Vollebekk, 0516 Oslo
Tel. sentralbord: +47 23 17 05 20 E-mail: post@abkklima.no www.nibeenergysystems.no

PL **NIBE-BIAWAR Sp. z o. o.** Aleja Jana Pawła II 57, 15-703 BIAŁYSTOK
Tel: 085 662 84 90 Fax: 085 662 84 14 E-mail: sekretariat@biawar.com.pl www.biawar.com.pl

RU © **"EVAN"** 17, per. Boynovskiy, Nizhny Novgorod
Tel./fax +7 831 419 57 06 E-mail: info@evan.ru www.nibe-evan.ru

SE **NIBE AB Sweden**, Box 14, Hannabadsvägen 5, SE-285 21 Markaryd
Tel: +46-(0)433-73 000 Fax: +46-(0)433-73 190 E-mail: info@nibe.se www.nibe.se

For countries not mention in this list, please contact Nibe Sweden or check www.nibe.eu for more information.

2 Delivery and handling

Transport and storage

F2040 must be transported and stored vertically.

Assembly

- Place F2040 outdoors on a solid level base that can take the weight, preferably a concrete foundation. If concrete slabs are used they must rest on asphalt or shingle.
- The concrete foundation or slabs must be positioned so that the lower edge of the evaporator is at the level of the average local snow depth, although a minimum of 300 mm.
- The F2040 should not be positioned next to sensitive walls, for example, next to a bedroom.
- Also ensure that the placement does not inconvenience the neighbours.
- F2040 must not be placed so that recirculation of the outdoor air can occur. This causes lower output and impaired efficiency.
- The evaporator should be sheltered from direct wind, which negatively affects the defrosting function. Place F2040 protected from wind against the evaporator.
- Large amounts of condensation water as well as melt water from defrosting can be produced. Condensation water must be led off to a drain or similar (see page 7).
- Care must be exercised so that the heat pump is not scratched during installation.

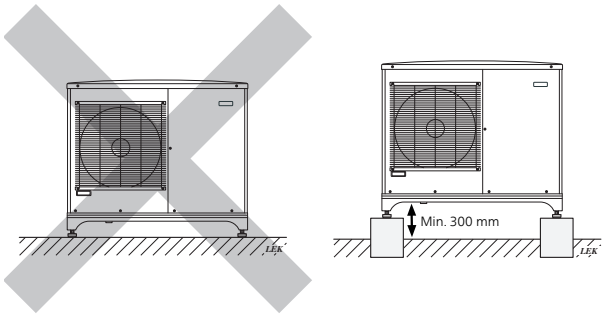

Do not place F2040 directly on the lawn or other non solid surface.

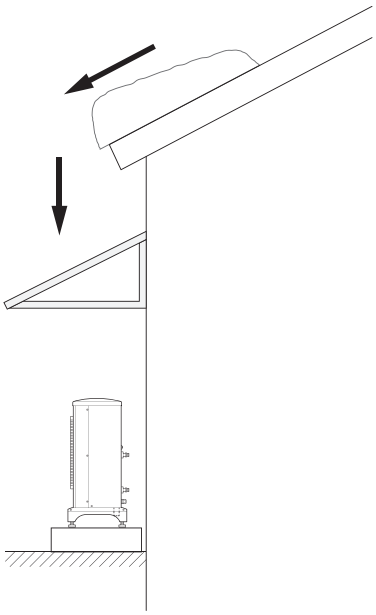

If there is a risk of snow slip from roof, a protective roof or cover must be erected to protect the heat pump, pipes and wiring.

Condensation run off

Condensation water trough

The condensation water trough is used to collect and lead away condensation water from the heat pump.

NOTE

It is important to the heat pump function that condensation water is led away and that the drain for the condensation water run off is not positioned so that it can cause damage to the house.

NOTE

Pipe with heating cable for draining the condensation water trough are not included.

NOTE

To ensure this function the accessory KVR 10 should be used.

NOTE

The electrical installation and wiring must be carried out under the supervision of an authorised electrician.

NOTE

Self regulating heating cables must not be connected.

Caution

If none of the recommended alternatives is used good lead off of condensation water must be assured.

- The condensation water (up to 50 litres/day) collected in the trough should be routed by pipe to an appropriate drain, it is recommended that the shortest outdoor stretch possible is used.
- The section of the pipe that can be affected by frost must be heated by the heating cable to prevent freezing.
- Route the pipe downward from F2040.
- The outlet of the condensation water pipe must be at a depth that is frost free or alternatively indoors (with reservation for local ordinances and regulations).
- Use a water trap for installations where air circulation may occur in the condensation water pipe.
- The insulation must be tight against the bottom of the condensation water trough.

Drain pan heater, control

The drain pan heater is supplied with power when one of the following conditions is met:

1. Operating mode "Heating" or "Hot water" is activated.
2. The compressor has been in operation for at least 30 minutes after last start.
3. The ambient temperature is lower than 1 C.

Recommended alternatives

Stone caisson

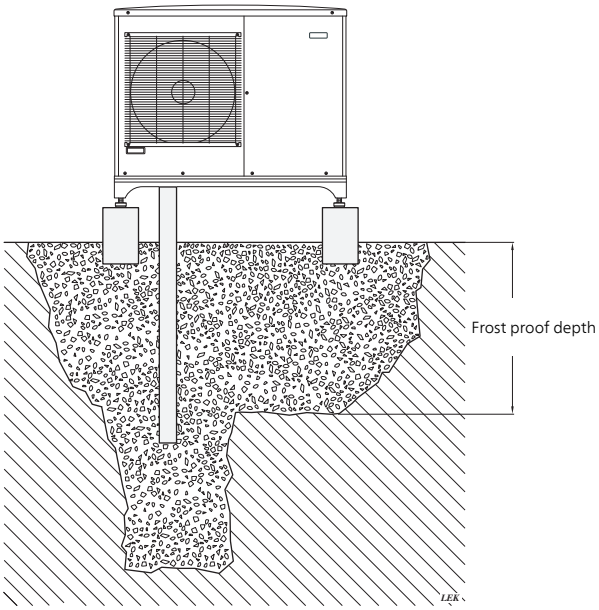

If the house has a cellar the stone caisson must be positioned so that condensation water does not affect the house. Otherwise the stone caisson can be positioned directly under the heat pump.

The outlet of the condensation water pipe must be at frost free depth.

Drain indoors

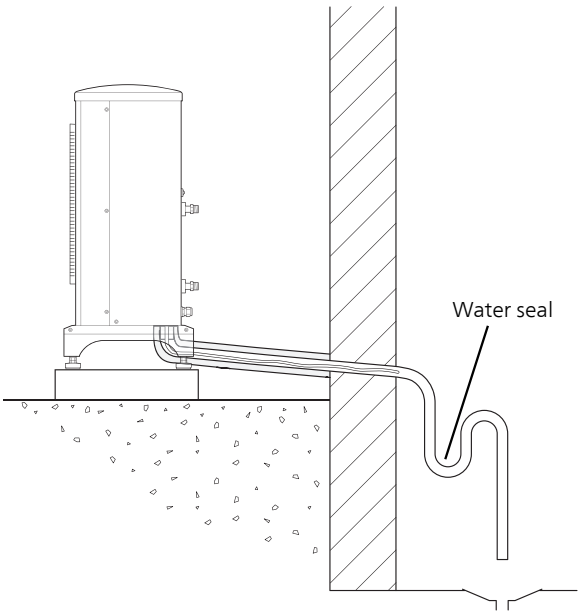

The condensation water is lead to an indoor drain (subject to local rules and regulations).

Route the pipe downward from F2040.

The condensation water pipe must have a water seal to prevent air circulation in the pipe.

Gutter drainage

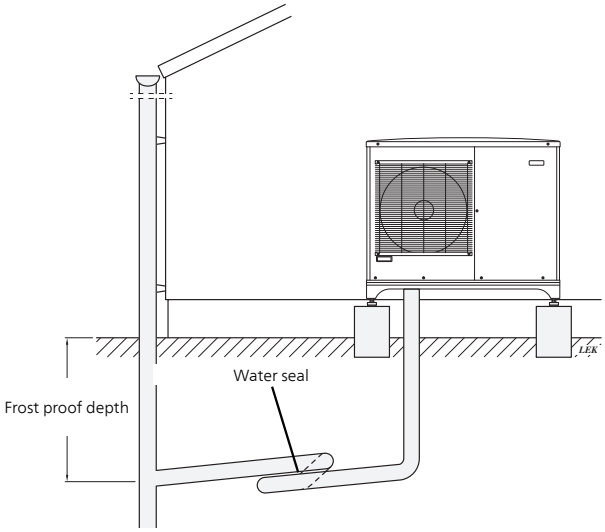

The outlet of the condensation water pipe must be at frost free depth.

Route the pipe downward from F2040.

The condensation water pipe must have a water seal to prevent air circulation in the pipe.

Installation area

The distance between F2040 and the house wall must be at least 150 mm. Clearance in front of F2040 should be at least one metre.

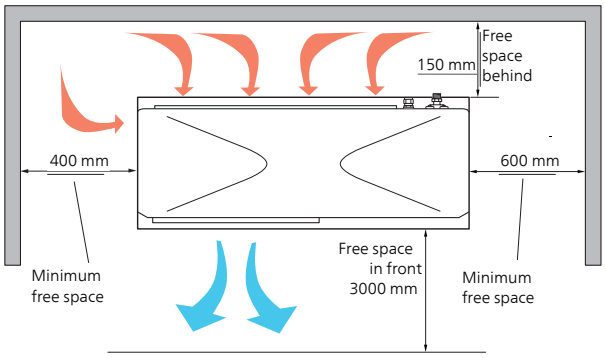

Supplied components

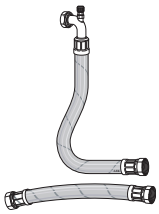

2 flexible hoses (R25) with 4 seals

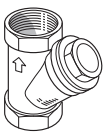

Particle filter R25 (HQ1).

Removing the covers

F2040-8

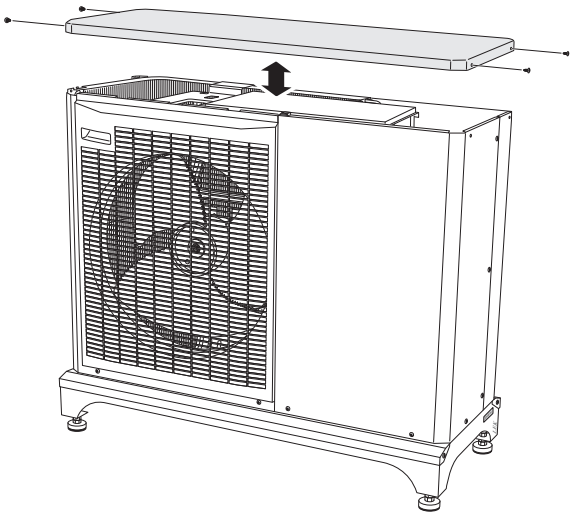

F2040-12

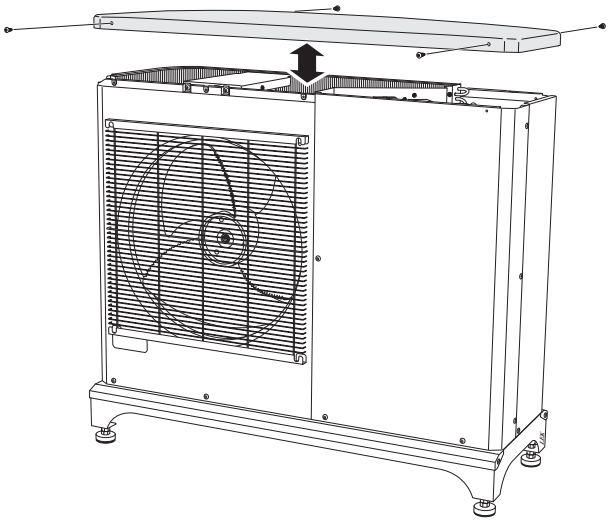

F2040-16

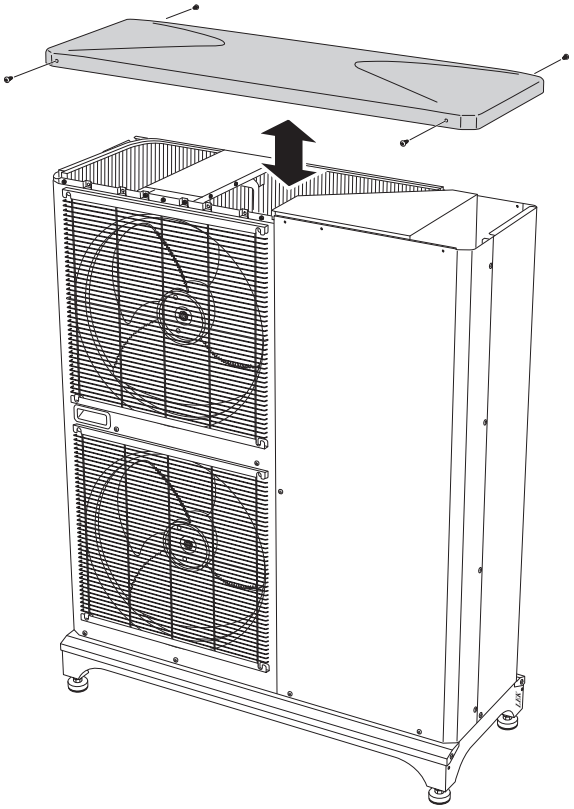

Removing the front panel

F2040-8

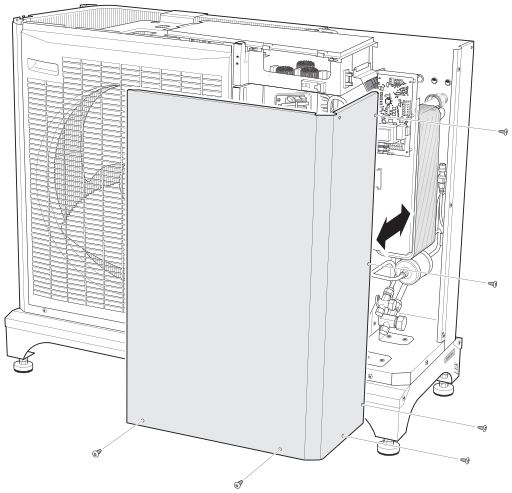

F2040-12

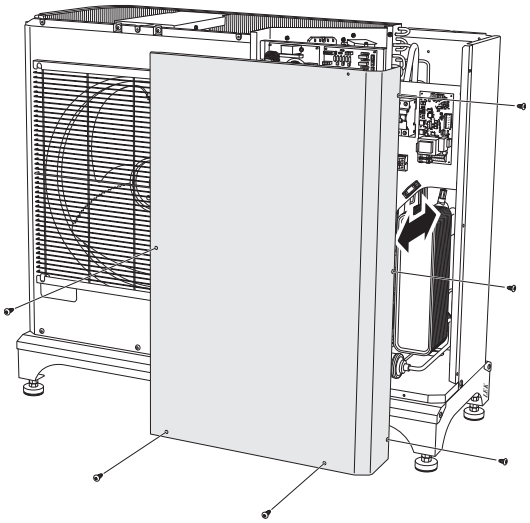

F2040-16

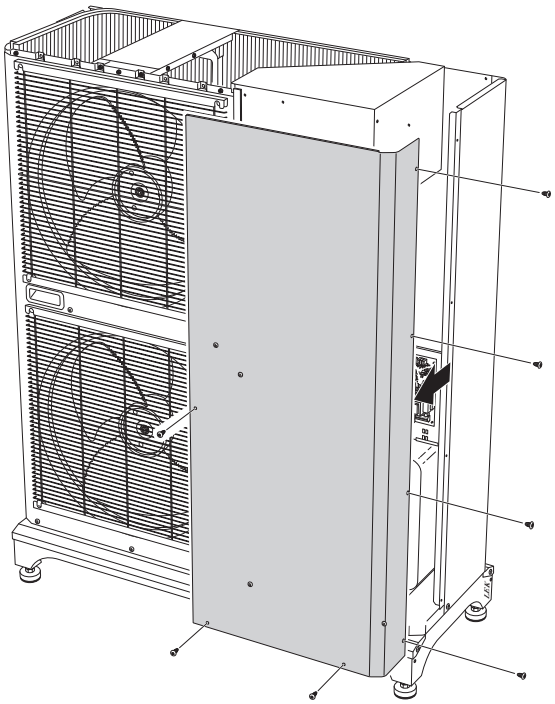

Removing the side panel

F2040-12

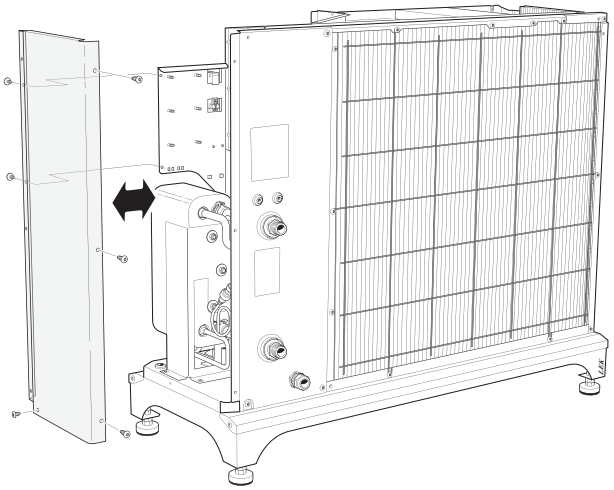

F2040-16

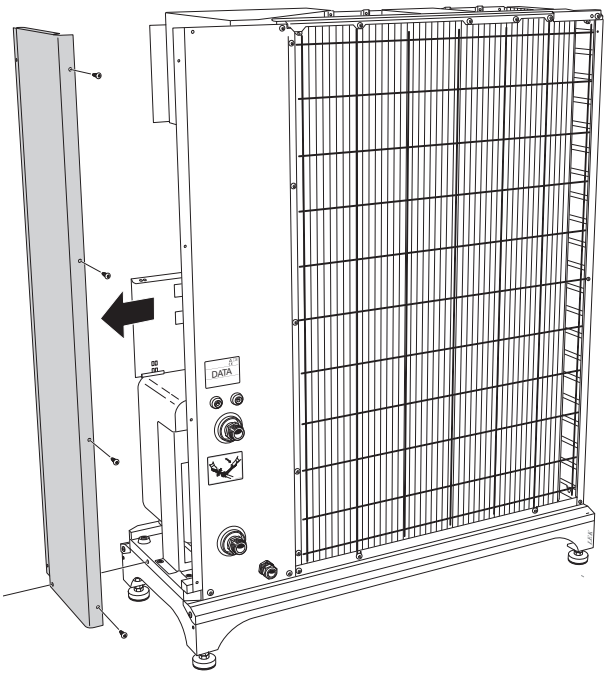

3 The heat pump design

General

F2040-8

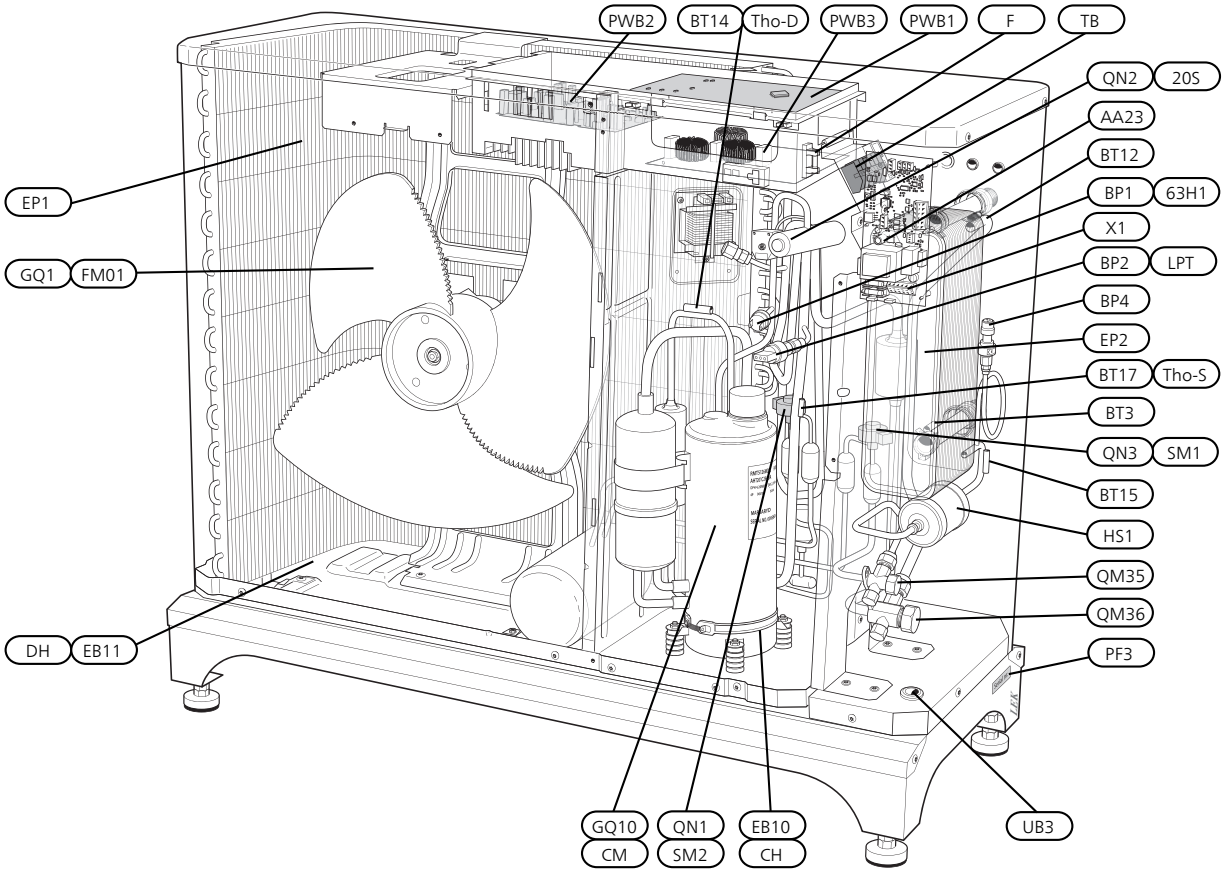

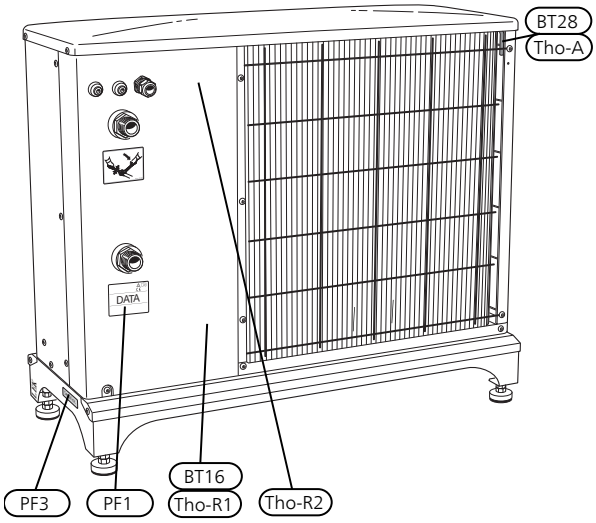

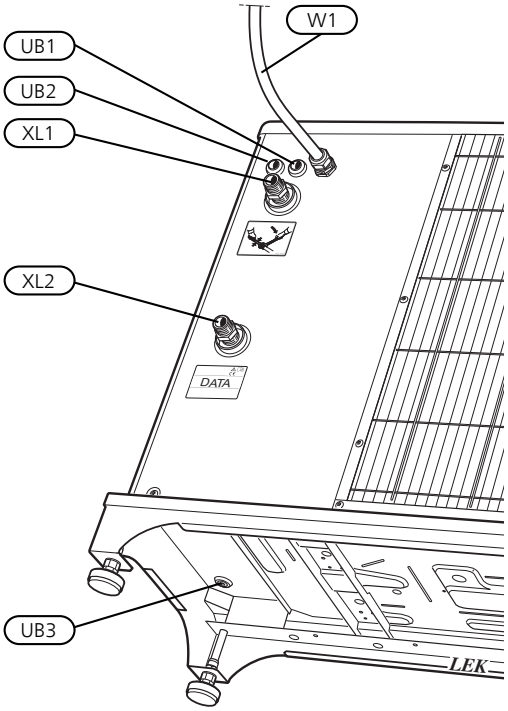

F2040-12

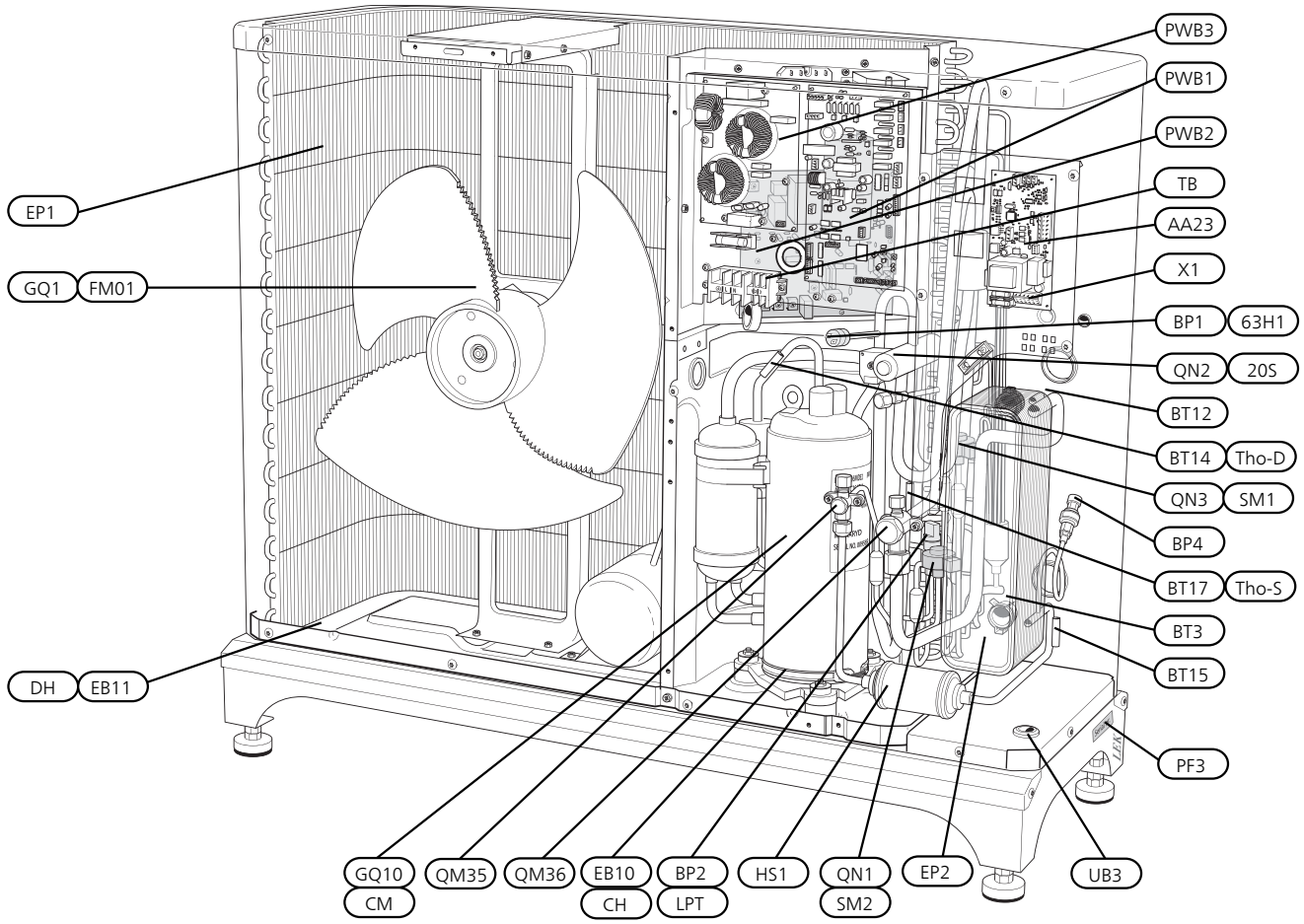
PWB3
PWB1
PWB2
TB
AA23
X1
BP1
63H1
QN2
20S
BT12
BT14
Tho-D
QN3
SM1
BP4
BT17
Tho-S
BT3
BT15
PF3
UB3
EP1
GQ1
FM01
DH
EB11
GQ10
CM
QM35
QM36
EB10
CH
BP2
LPT
HS1
QN1
SM2
EP2

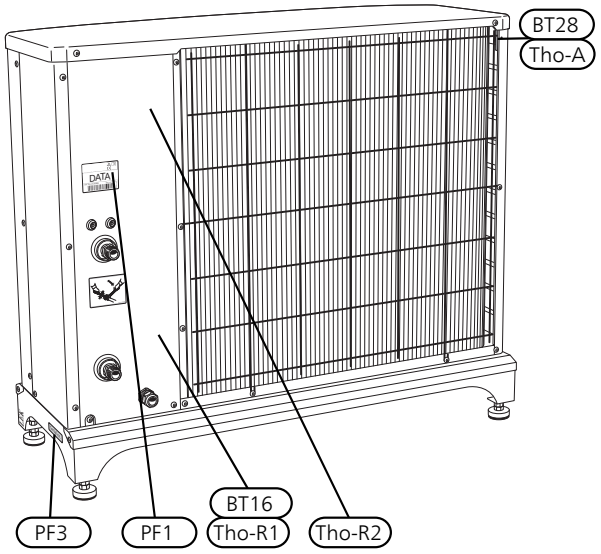
BT28
Tho-A
PF3
PF1
BT16
Tho-R1
Tho-R2

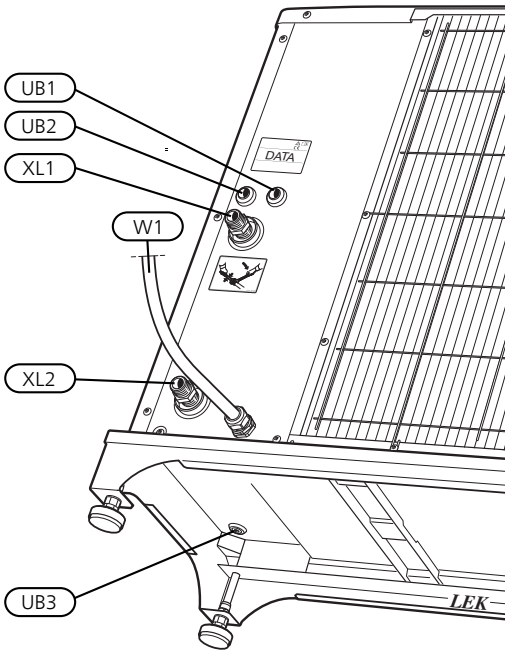
UB1
UB2
XL1
W1
XL2
UB3
LEK

F2040-16

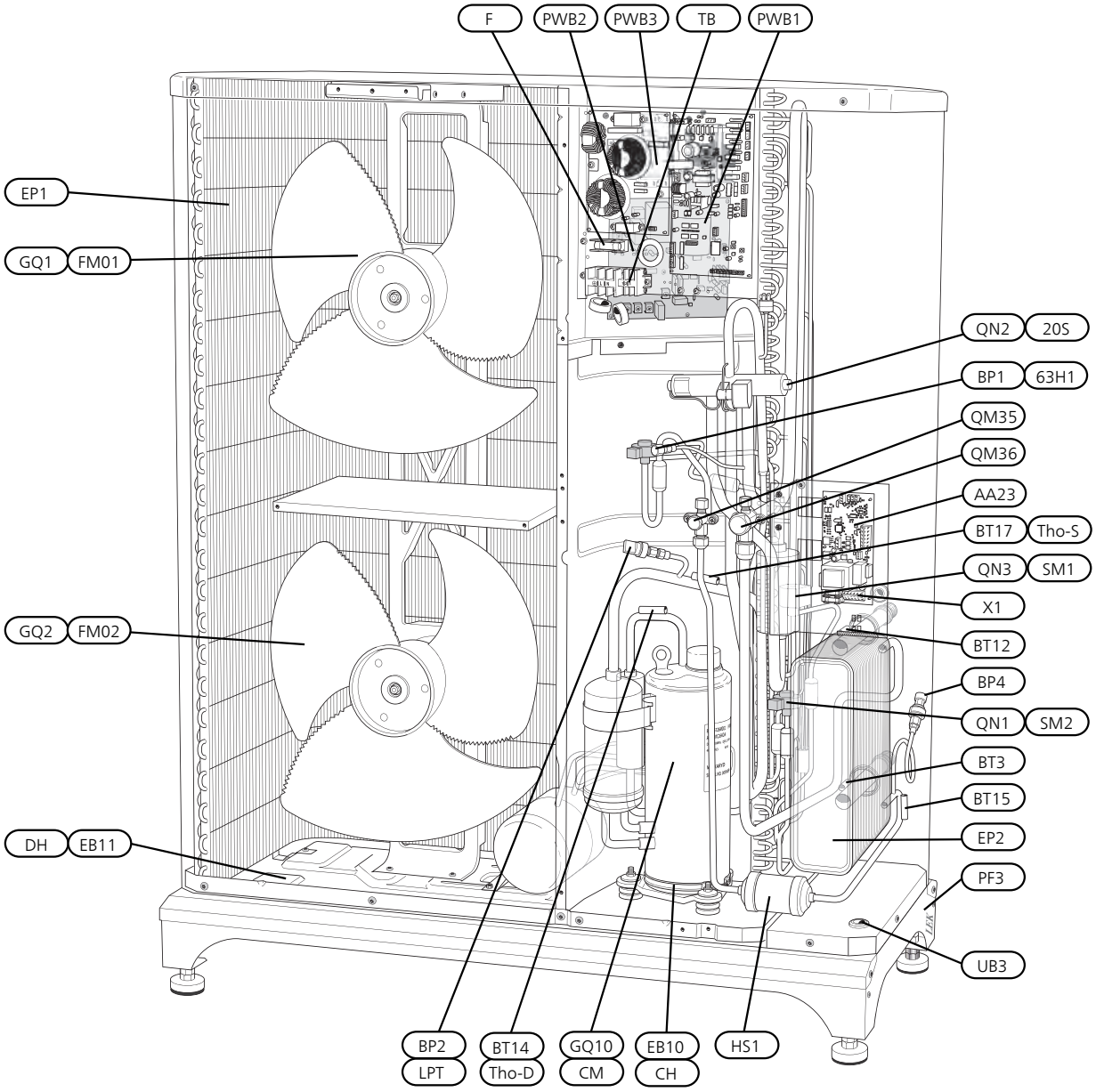
F
PWB2
PWB3
TB
PWB1
EP1
GQ1
FM01
QN2
20S
BP1
63H1
QM35
QM36
AA23
BT17
Tho-S
QN3
SM1
X1
GQ2
FM02
BT12
BP4
QN1
SM2
BT3
BT15
DH
EB11
EP2
PF3
UB3
BP2
LPT
BT14
Tho-D
GQ10
CM
EB10
CH
HS1

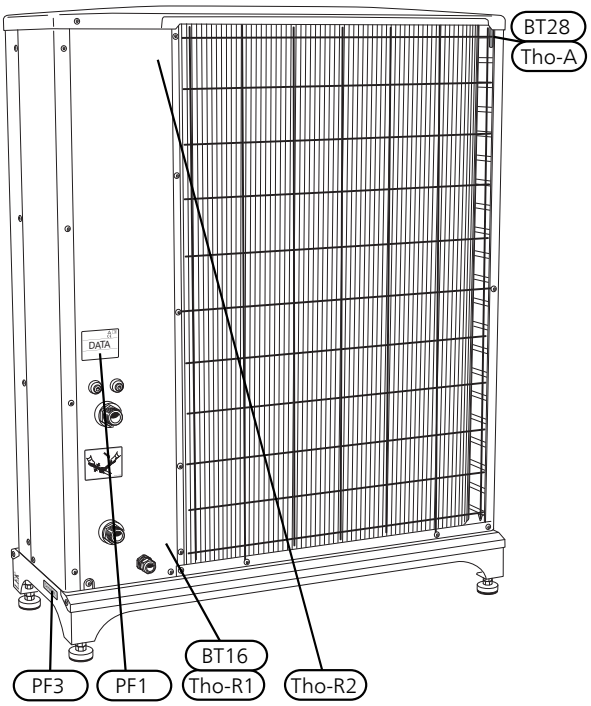
BT28
Tho-A
DATA
BT16
PF3
PF1
Tho-R1
Tho-R2

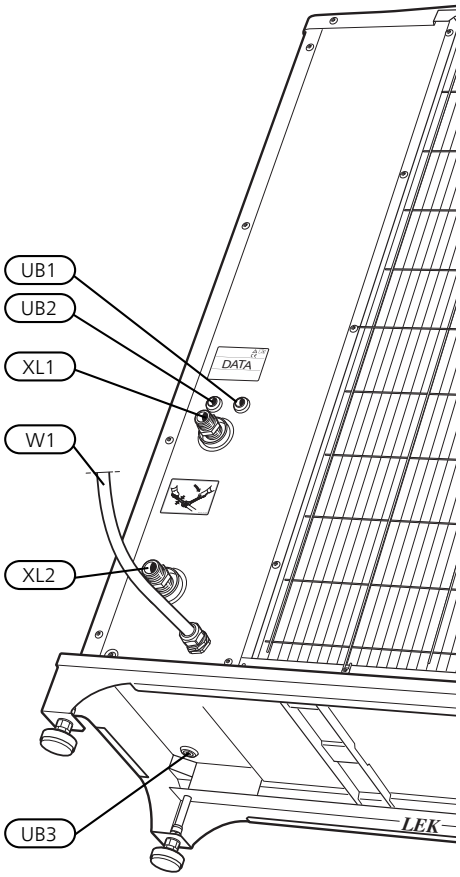
UB1
UB2
XL1
W1
XL2
UB3
DATA
LEK

Component list F2040-8 , -12 , -16

Pipe connections

QM35	Service valve, liquid side
QM36	Service valve, gas side
XL1	Connection, heating medium out ofF2040, G1" (Ø28 mm)
XL2	Connection, heating medium in to F2040, G1" (Ø28 mm)

Sensors etc.

BP1 (63H1)	High pressure pressostat
BT3	Temperature sensor, heating medium return line
BT12	Temperature sensor, condenser supply line
BT14 (Tho-D)	Temperature sensor, hot gas
BT15	Temperature sensor, fluid pipe
BT16 (Tho-R1)	Temperature sensor 1, evaporator
BT17 (Tho-S)	Temperature sensor, suction gas
BT28 (Tho-A)	Temperature sensor, ambient
BP2 (LPT)	Low pressure transmitter
BP4	High pressure sensor
Tho-R2	Temperature sensor 2, evaporator

Electrical components

AA23	Communication board
AA23-F3	Fuse for external heating cable (250 mA), max 45 W.
AA23-S3	DIP switch, addressing of outdoor unit
AA23-X1	Terminal block, KVR
AA23-X4	Terminal block, communication from indoor module
AA23-X100	Communication with TB
EB10 (CH)	Compressor heater
EB11 (DH)	Drip tray heater
F	Main fuse compressor unit
GQ1 (FM01)	Fan
GQ2 (FM02)	Fan
PWB1	Control board
PWB2	Inverter board
PWB3	Filter board
TB	Terminal block, incoming supply and communication with board AA23

Cooling components

QN2 (20S)	4-way valve
GQ10 (CM)	Compressor
QN3 (SM1)	Expansion valve, cooling
QN1 (SM2)	Expansion valve, heating
EP1	Evaporator (air coil, copper pipe with aluminium flange)
EP2	Condenser (ACH 30, copper/stainless steel)
HS1	Drying filter

Miscellaneous

PF1	Type plate
PF3	Serial number
UB1	Cable gland, incoming supply
UB2	Cable grommet, communication
UB3	Cable grommet, heating cable (EB14)
W1	Cable, incoming supply

Designations in component locations according to standard IEC 81346-1 and 81346-2. Designations within brackets according to the supplier's standard.

Electrical connection

Electrical components

AA23	Communication board
AA23-F3	Fuse for external heating cable (250 mA), max 45 W.
AA23-S3	DIP switch, addressing of outdoor unit
AA23-X1	Terminal block, KVR
AA23-X4	Terminal block, communication from indoor module
AA23-X100	Communication with TB
EB10 (CH)	Compressor heater
EB11 (DH)	Drip tray heater
F	Main fuse compressor unit
GQ1 (FM01)	Fan
GQ2 (FM02)	Fan
PWB1	Control board
PWB2	Inverter board
PWB3	Filter board
TB	Terminal block, incoming supply and communication with board AA23

Designations in component locations according to standard IEC 81346-1 and 81346-2. Designations within brackets according to the supplier's standard.

F2040-8

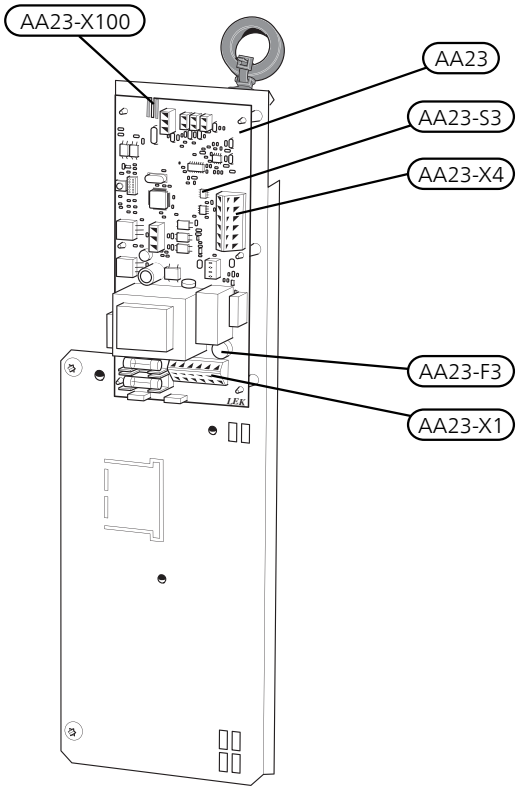

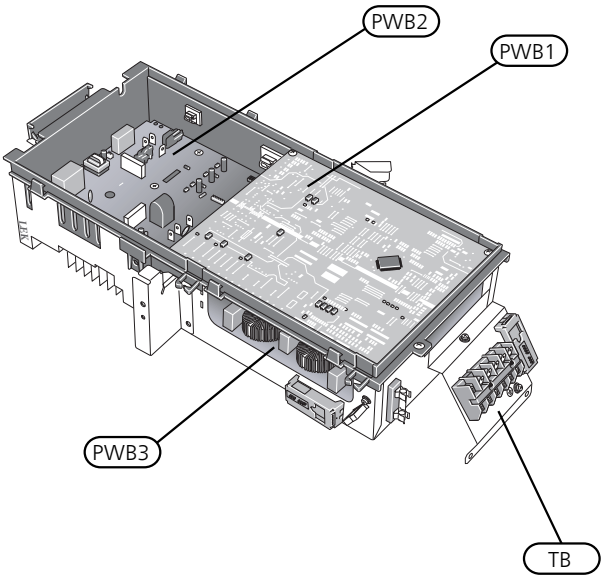

F2040-12

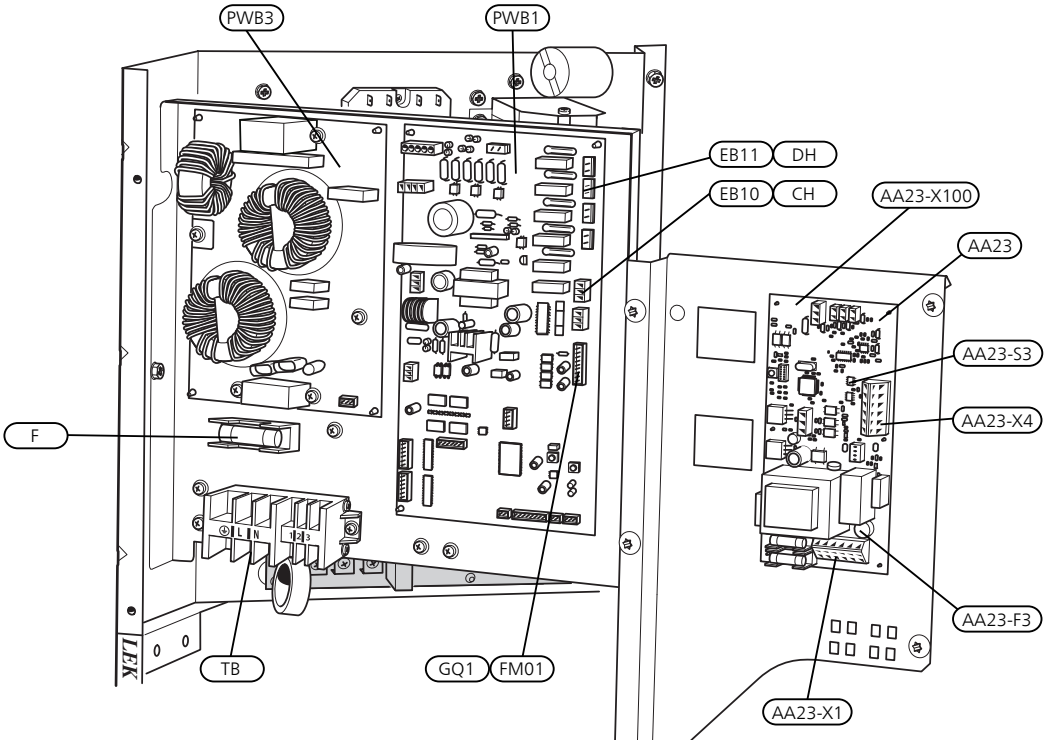
PWB3
PWB1
EB11
DH
EB10
CH
AA23-X100
AA23
AA23-S3
AA23-X4
F
AA23-F3
TB
GQ1
FM01
AA23-X1

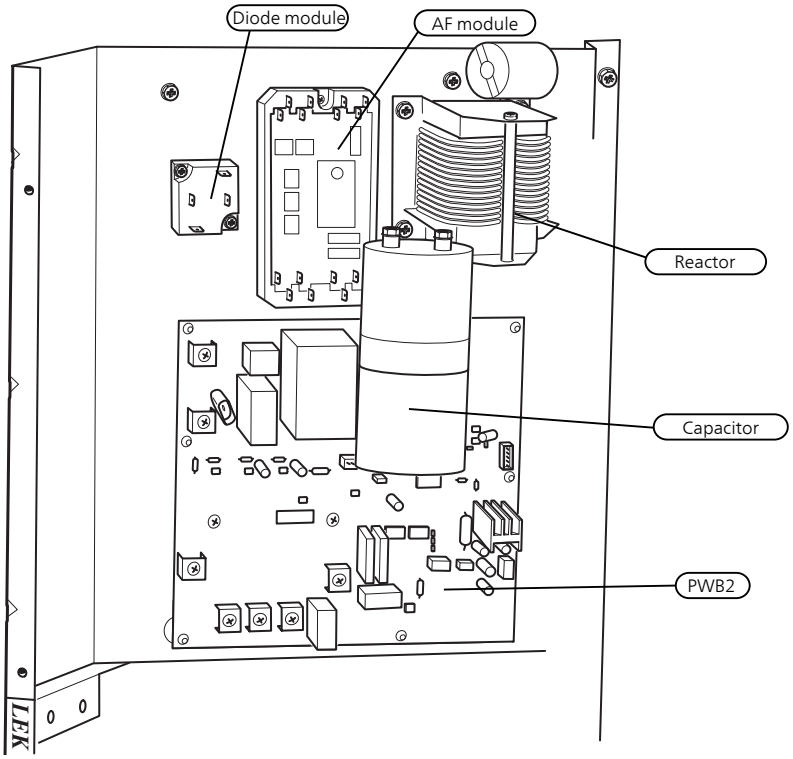
Diode module
AF module
Reactor
Capacitor
PWB2

F2040-16

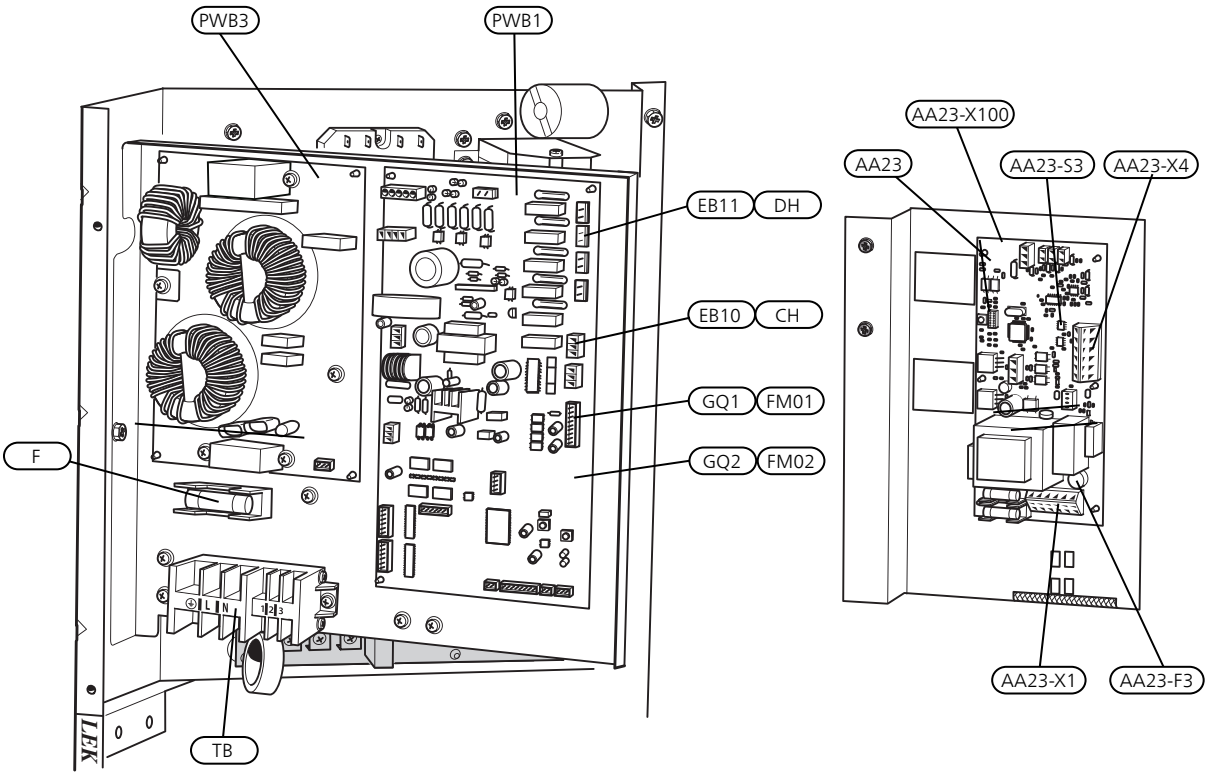
PWB3
PWB1
AA23-X100
AA23
AA23-S3
AA23-X4
EB11
DH
EB10
CH
GQ1
FM01
GQ2
FM02
F
TB
AA23-X1
AA23-F3
LEK

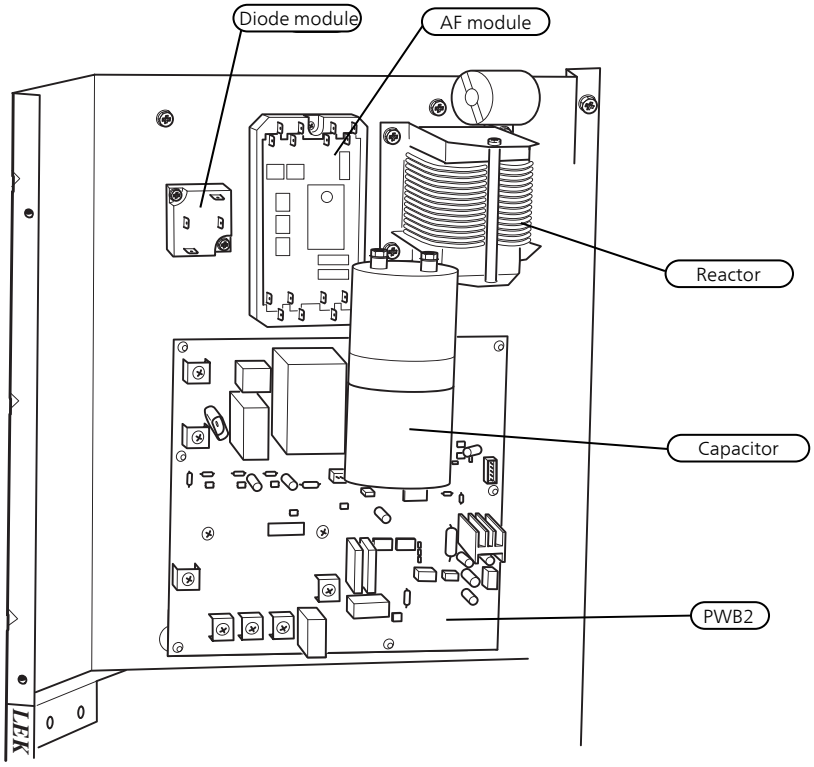
Diode module
AF module
Reactor
Capacitor
PWB2
LEK

4 Pipe connections

General

Pipe installation must be carried out in accordance with current norms and directives.

F2040 can only operate up to a return temperature of about 55 °C and an outgoing temperature of about 58 °C from the heat pump.

F2040 is not equipped with external shut off valves on the water side; these must be installed to facilitate any future servicing. The return temperature is limited by the return line sensor.

Water volumes

When docking with F2040 free flow in the climate system is recommended for correct heat transfer. This can be achieved by use of a bypass valve. If free flow cannot be ensured, it is recommended that a buffer tank (NIBE UKV) is installed.

Following water volumes are recommended

F2040	-8	-12	-16
Minimum volume, climate system during heating/cooling	50 l	80 l	150 l
Minimum volume, climate system during under floor cooling	80 l	100 l	150 l

NOTE

The pipe work must be flushed before the heat pump is connected, so that any contaminants do not damage the components.

Pipe coupling heating medium circuit

- F2040 can be connected directly to the heating system see the section "Docking" or according to one of the system solutions that can be downloaded from the website www.nibe.eu.
- The heat pump must be vented by the upper connection (QM20) using the venting nipple on the enclosed flexible hose.
- Install the supplied particle filter (HQ1) before the inlet, i.e. the connection (XL2, HM-in) on F2040.
- All outdoor pipes must be thermally insulated with at least 19mm thick pipe insulation.
- Install shutoff valves (QM31 and QM32) and drain valves (QM1) so that F2040 can be emptied in the event of prolonged power failures. Shutoff - (QM31 and QM32) and drain valve (QM31) are not part of the delivery

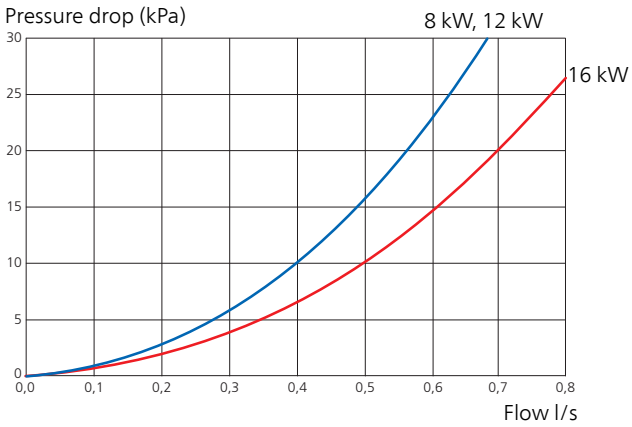

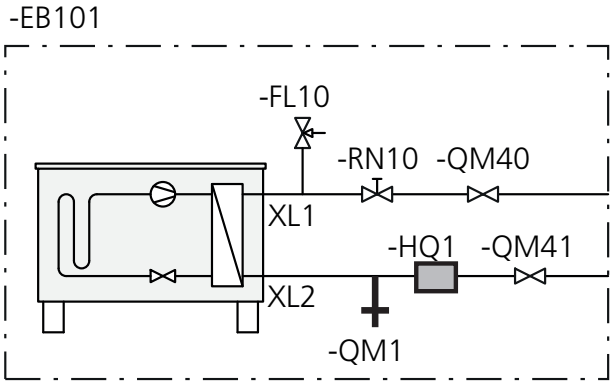

EB101	**Heat pump**
FL10	Safety valve
HQ1	Particle filter
RN10	Trim valve
QM1	Tapping valve
QM40	Shut-off valve
QM41	Shut-off valve

F2040-8

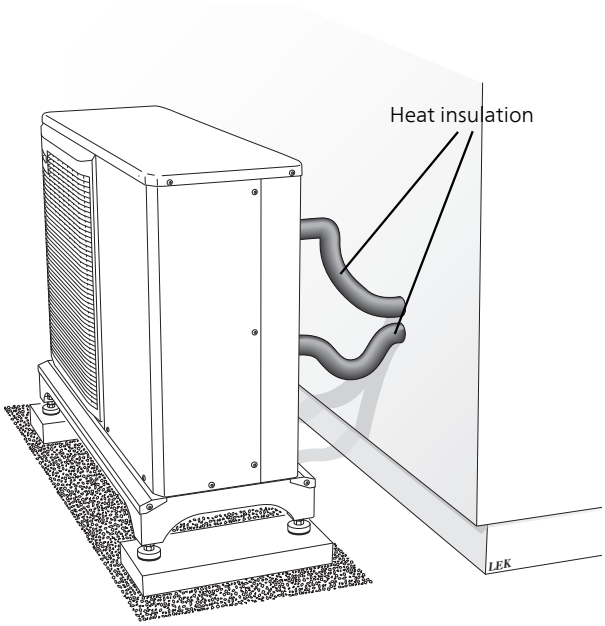

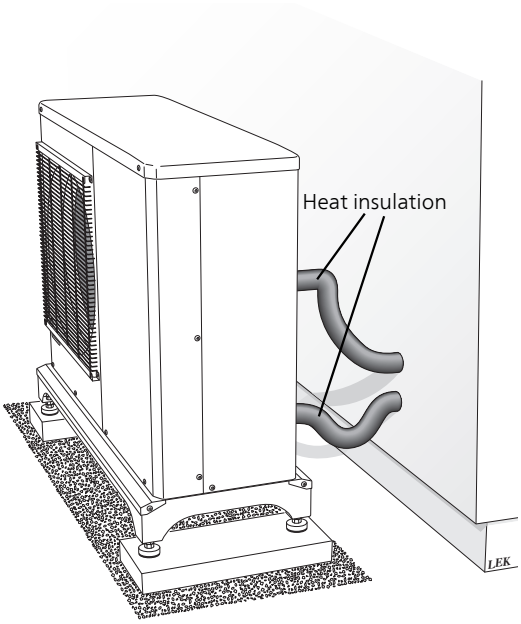

F2040-12

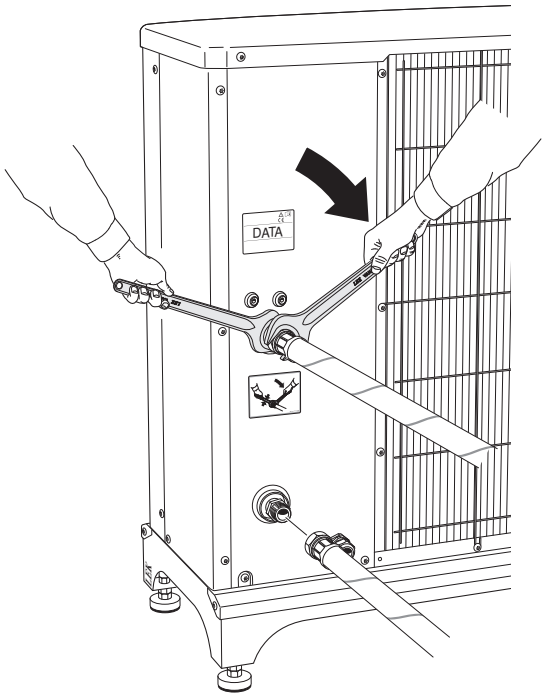

F2040-16

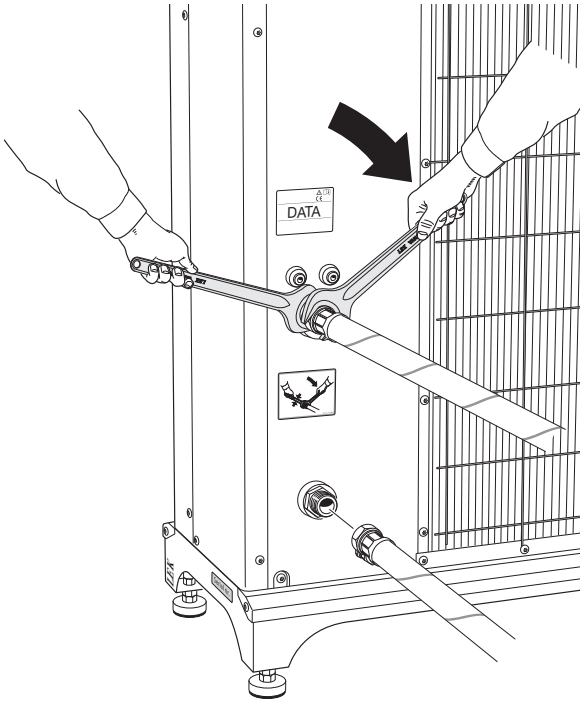

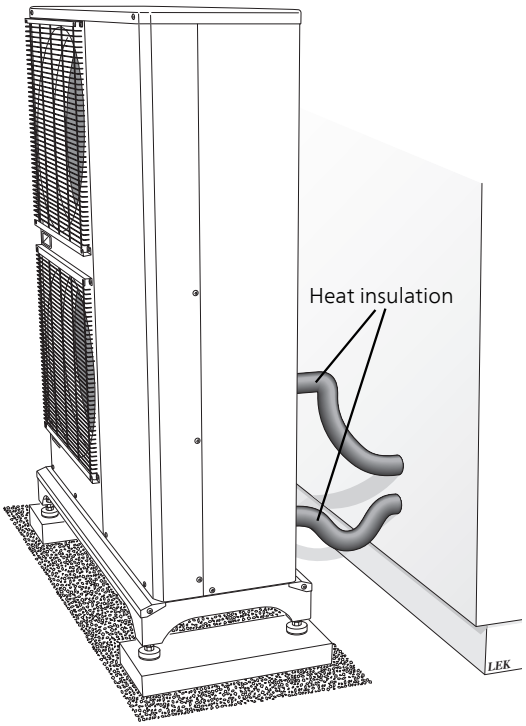

Docking alternatives

F2040 can be installed in several different ways. The requisite safety equipment must be installed in accordance with current regulations for all docked options.

See www.nibe.eu for more docking options.

Connecting accessories

Instructions for connecting accessories are in the installation instructions provided for the respective accessory. See page 42 for the list of the accessories that can be used with F2040.

5 Electrical connections

General

- A heat pump must not be connected without the permission of the electricity supplier and must be connected under the supervision of a qualified electrician.
- If a miniature circuit breaker is used this should have motor characteristic "C" (compressor operation). For MCB size see "Technical Specifications".
- F2040 does not include a circuit breaker on the incoming power supply. The heat pump's supply cable (W1) must be connected to a circuit-breaker with at least a 3 mm breaking gap. When the building is equipped with an earth-fault breaker the heat pump should be equipped with a separate one. Incoming supply must be 230 V 50Hz via distribution boards with fuses.
- If an insulation test is to be carried out in the building, disconnect the heat pump.
- Communication cable (W2) is inserted from the rear side through UB2.
- Connect communication cable (W2) from terminal block (AA23-X4) to the indoor section.

NOTE

Electrical installation and service must be carried out under the supervision of a qualified electrician. Electrical installation and wiring must be carried out in accordance with the stipulations in force.

NOTE

The external control must be taken into consideration when connecting.

NOTE

If the supply cable is damaged, only NIBE, its service representative or similar authorised person may replace it to prevent any danger and damage.

F2040-8

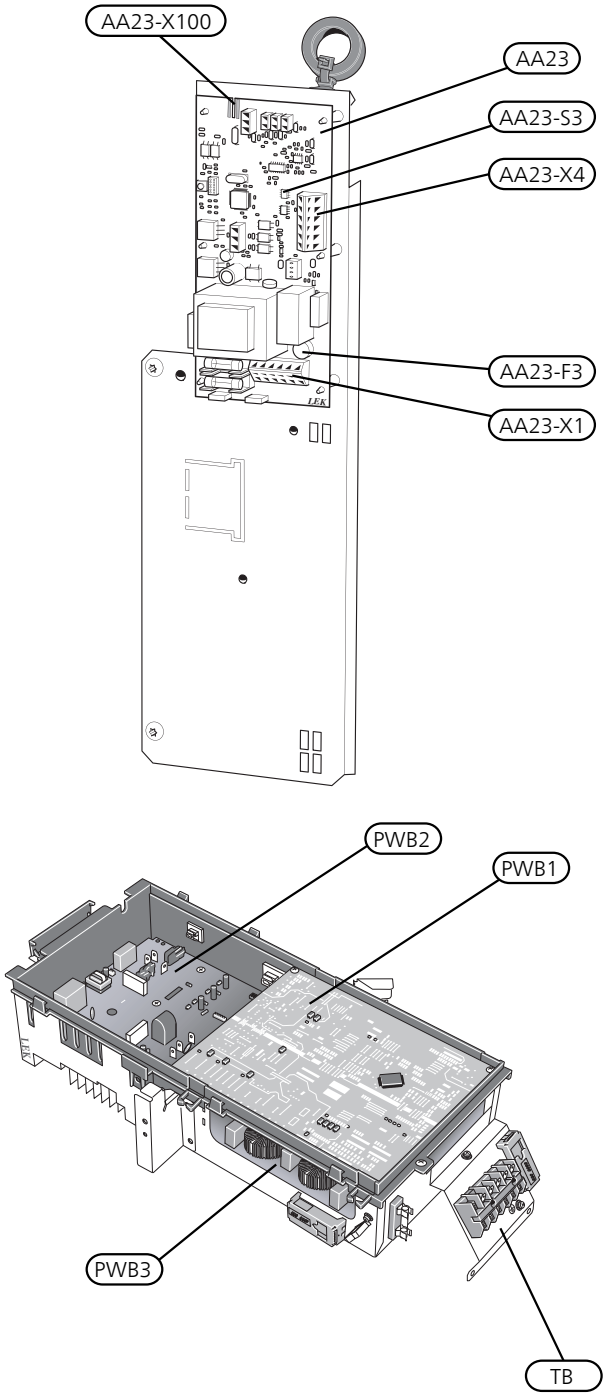

F2040-12

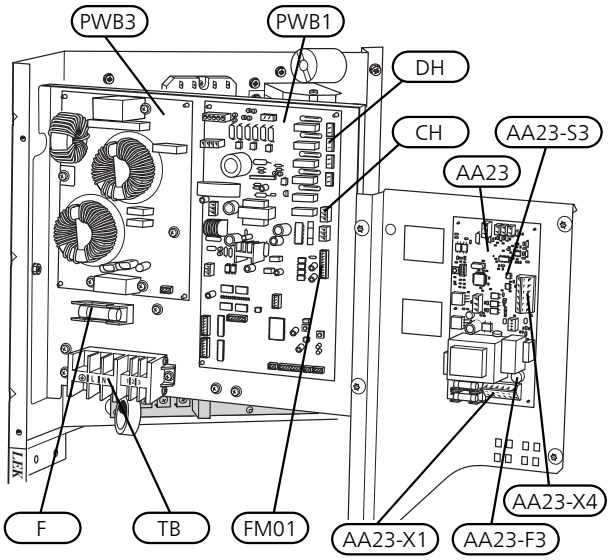

F2040-16

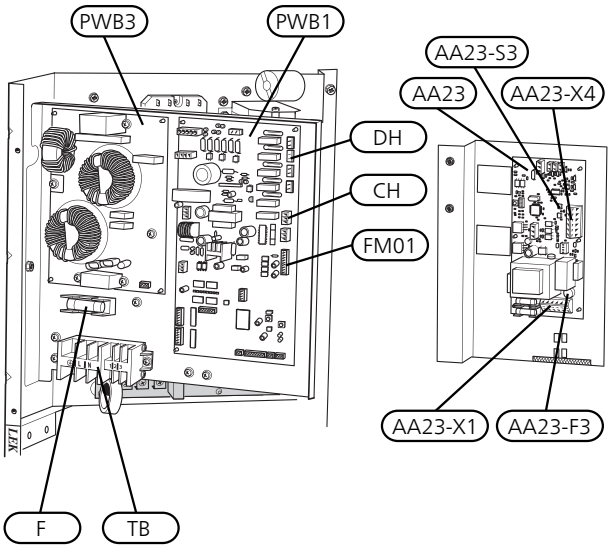

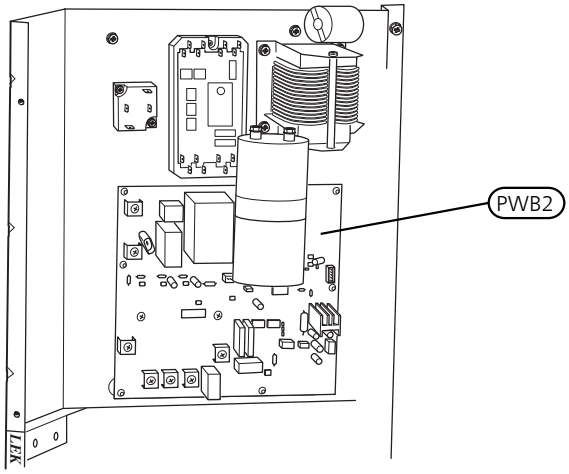

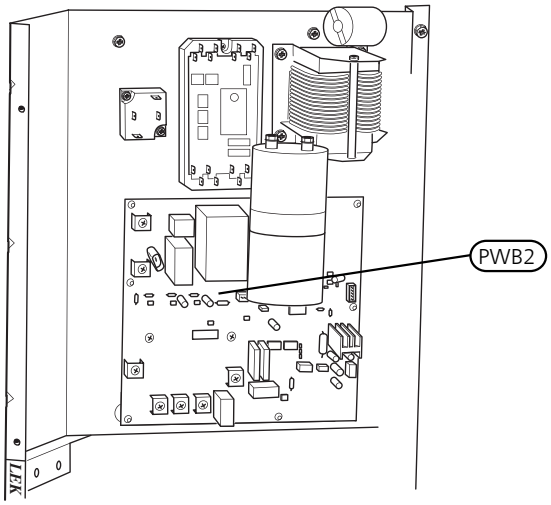

Connections

NOTE

To prevent interference, unscreened communication and/or sensor to external connections cables must not be laid closer than 20 cm to high voltage cables when cable routing.

Power connection

F2040-8

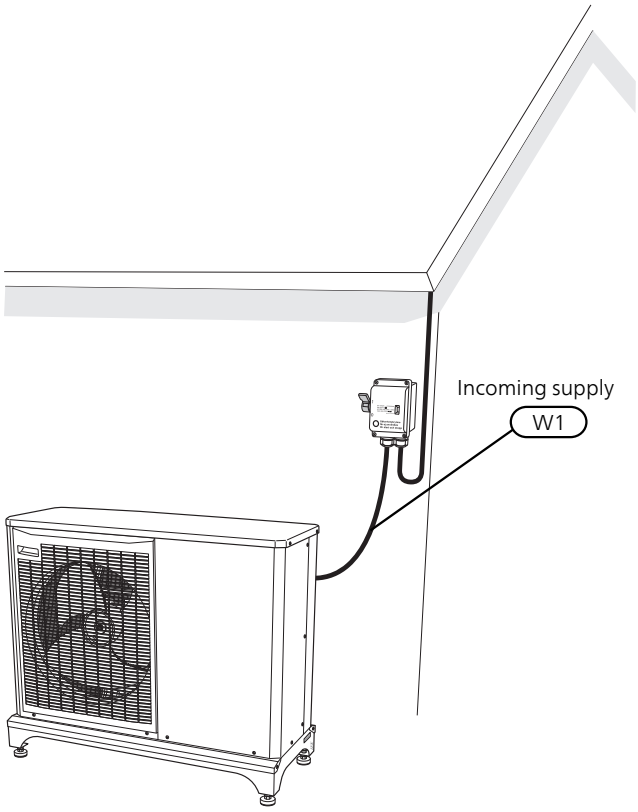

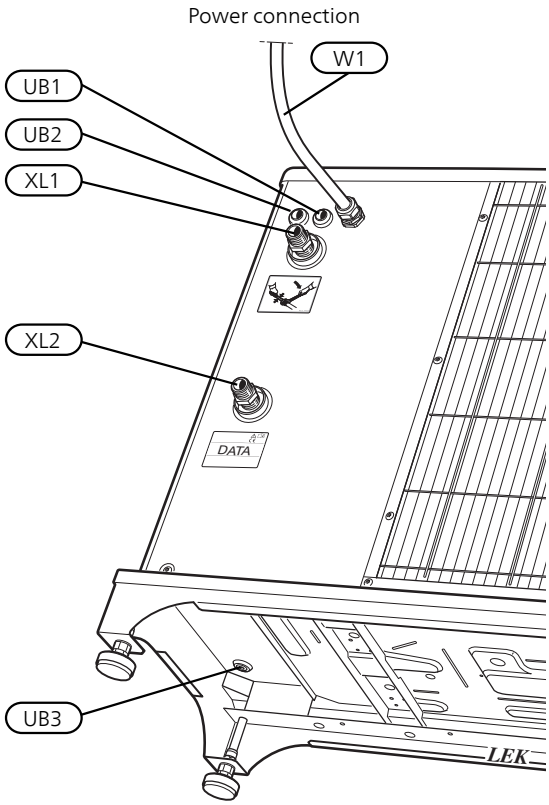

F2040-12

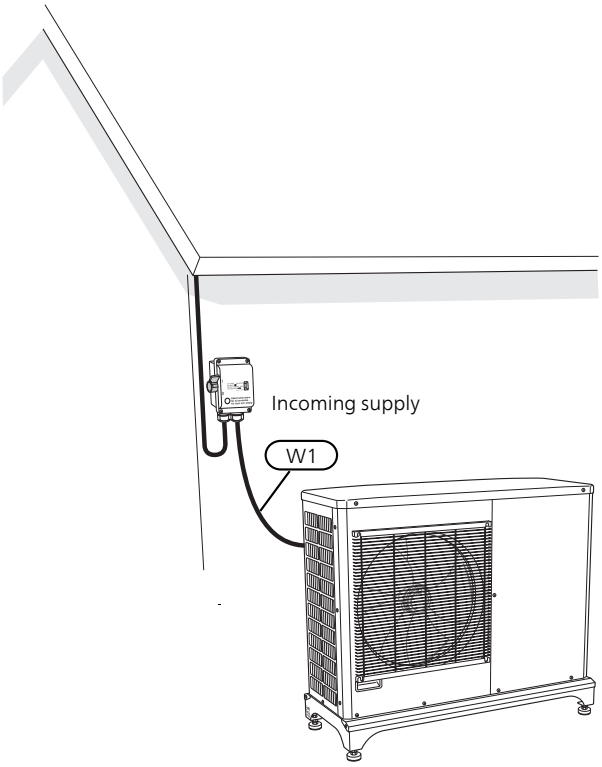
Incoming supply
W1

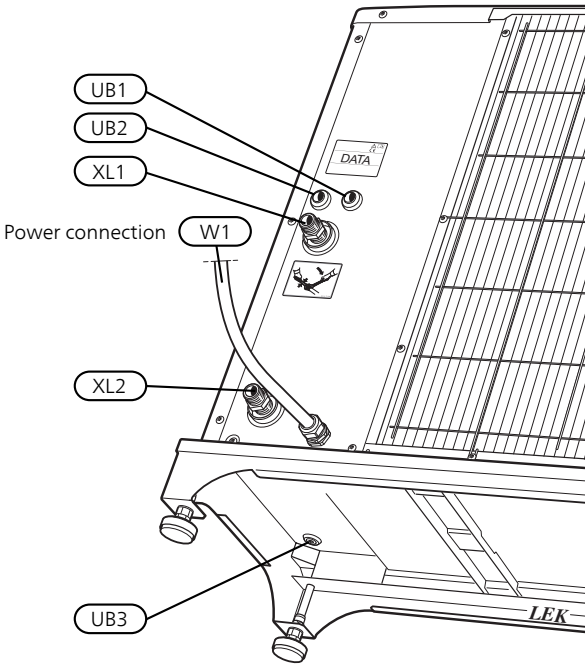
UB1
UB2
XL1
Power connection
W1
XL2
UB3
DATA
LEK

F2040-16

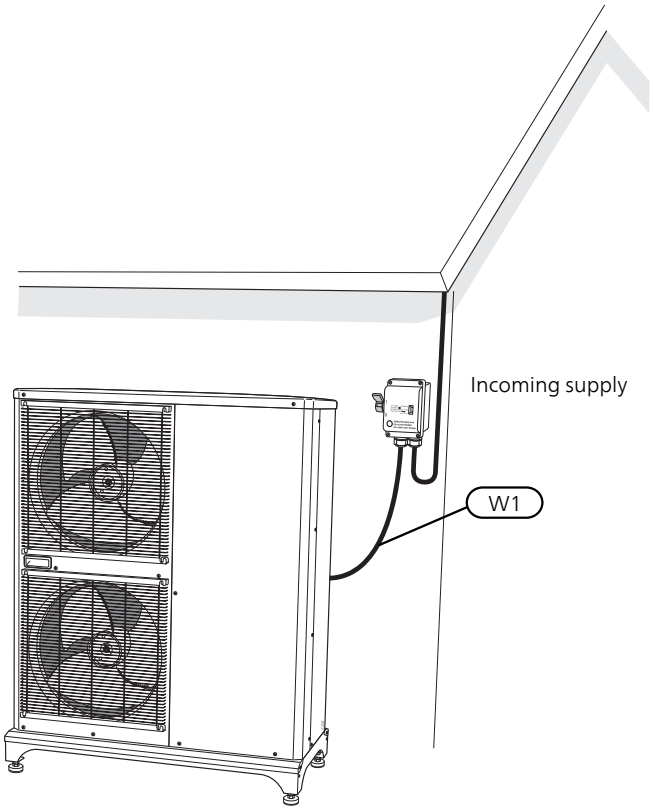

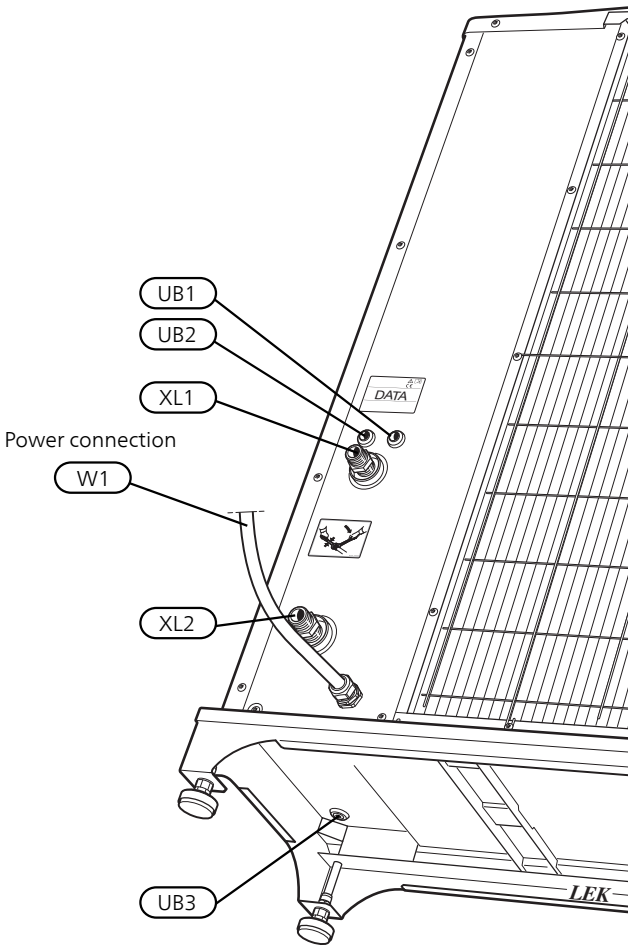

Incoming supply cable (W1) is supplied and factory connected to terminal block X1. Approx. 1.8 m cable is accessible outside the heat pump.

Connect communication cable (W2) (provided by installer) to terminal block AA23-X4 and secure with two cable ties, see image.

For connection of accessory KVR 10, heating cable (EB14) is connected via cable grommet UB3, see External heating cable KVR 10 (Accessory) on page 28.

List of components

UB1	Cable grommet, cascade connection
UB2	Cable grommet, communication
UB3	Cable grommet, heating cable (EB14)
W1	Cable, incoming supply

F2040-8

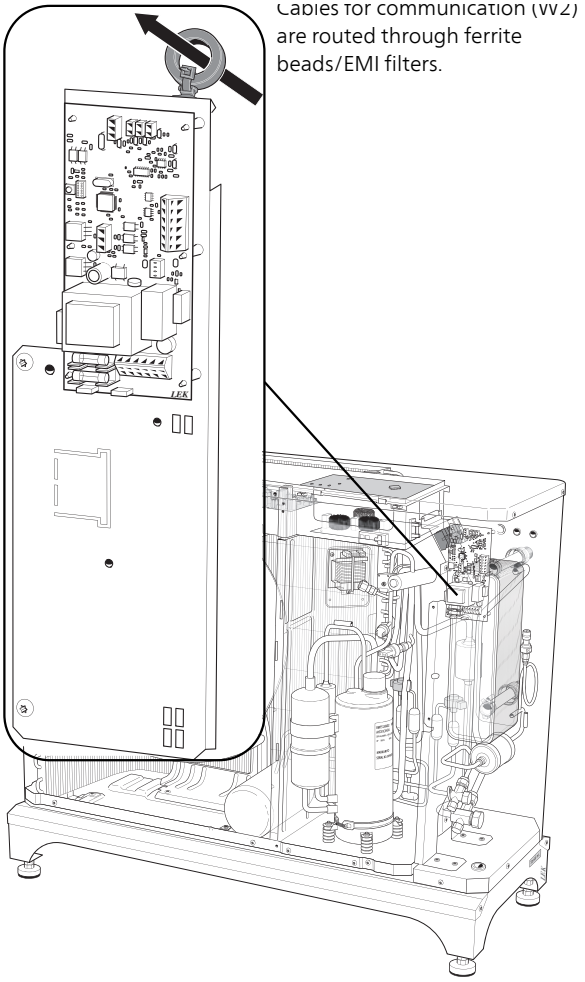

F2040-16

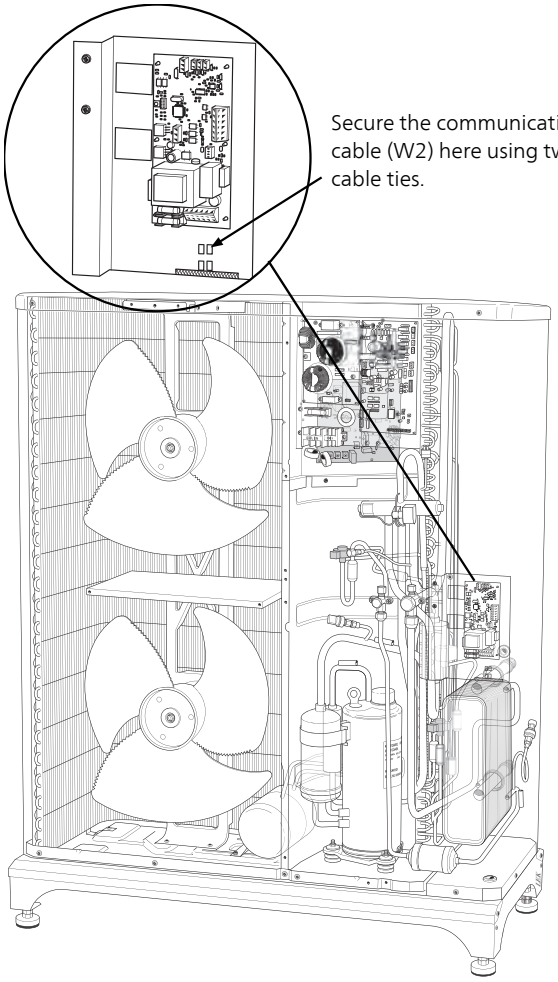

F2040-12

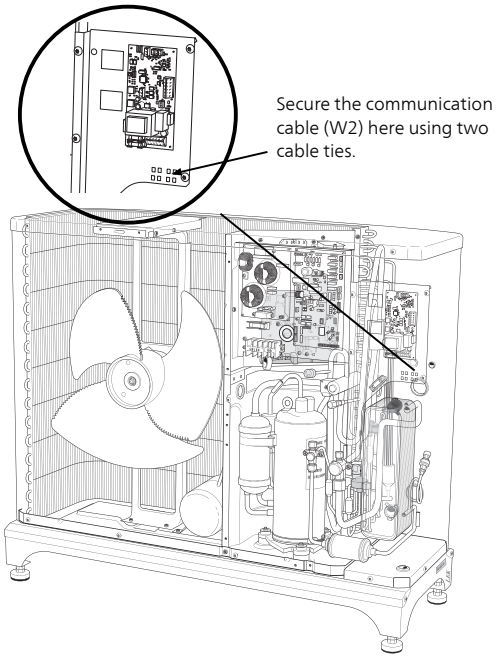

External heating cable KVR 10 (Accessory)

F2040 is equipped with a plinth for external heating cable EB14 not supplied). The connection is fused with 250 mA (F3 on the communication board AA23). If another cable is to be used, the fuse must be replaced with a suitable one (see table).

> **NOTE**
> Self regulating heating cables must not be connected.

Length (m)	Total power (W)	Fuse (F3)	NIBE Part no. Fuse
1	15	T100mA/250V	718085
3	45	T250mA/250V	518900*
6	90	T500mA/250V	718086

* Fitted at the factory.

Connect external heating cable (EB14) to terminal block X1:4–6 according to following image:

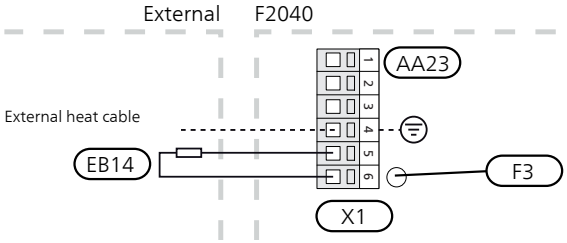

> **NOTE**
> The pipe must be able to withstand the heat from the heating cable.
>
> To ensure this function the accessory KVR 10 should be used.

Cable routing

The following images show recommended cable routing from the distribution box to the condensation water pipe. Route the heating cable (EB14) through the grommet underneath and secure with two cable ties at the electrical connection. Transfer between electrical cable and heating cable must occur after the lead-in to the condensation water pipe.

F2040-8

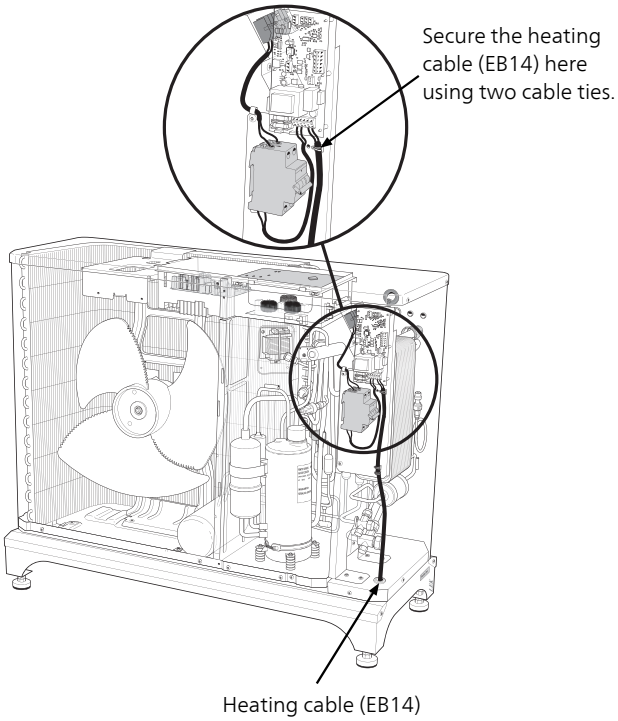

F2040-12

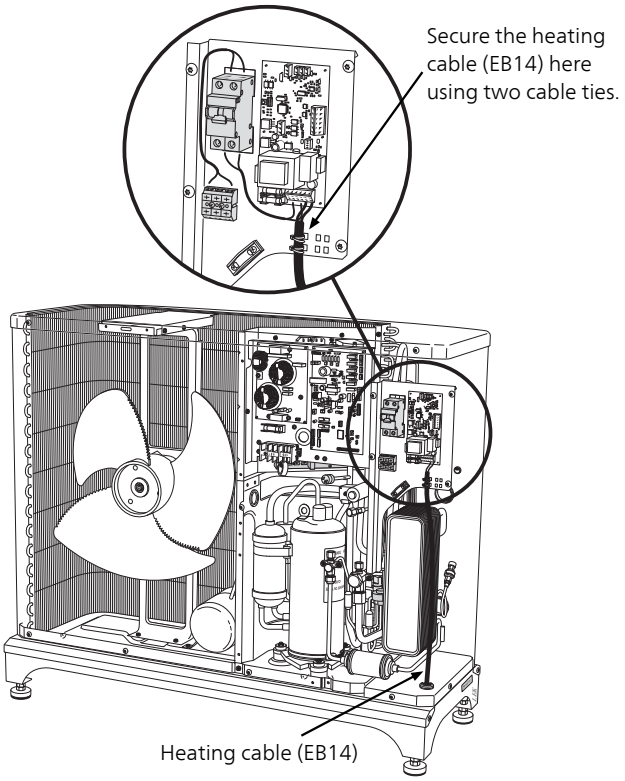

F2040-16

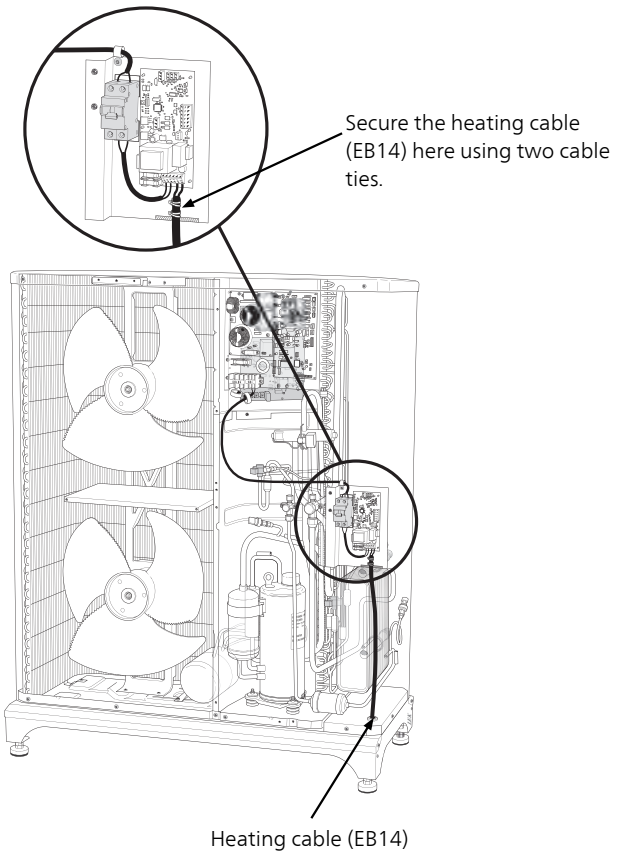

Ambient temperature sensor

An ambient temperature sensor (Tho-A) is located on the rear of F2040.

Communication

F2040 can communicate with NIBE indoor modules, by connecting the indoor module to the terminal block X4:1–3 according to the following image:

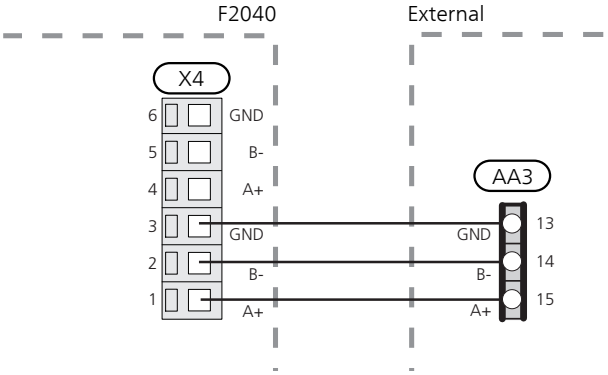

For connection of indoor module, see relevant manual on www.nibe.eu.

Addressing via cascade connection

The communication address is selected for F2040 to the control module on the communication board (AA23-S3). Default has F2040 address **1**. In a cascade connection all F2040 must have a unique address. The address is coded in binary.

Address	S3:1	S3:2	S3:3
1	OFF	OFF	OFF
2	On	OFF	OFF
3	OFF	On	OFF
4	On	On	OFF
5	OFF	OFF	On
6	On	OFF	On
7	OFF	On	On
8	On	On	On

6 Commissioning and adjusting

Preparations

- Before commissioning, check that the charge circuit and climate system are filled and well vented.
- Check the pipe system for leaks.

Filling and venting the heating medium system

1. The heating medium system is filled with water to the required pressure.
2. Vent the system using the venting nipple (QM20) on the enclosed flexible hose and possibly the circulation pump.

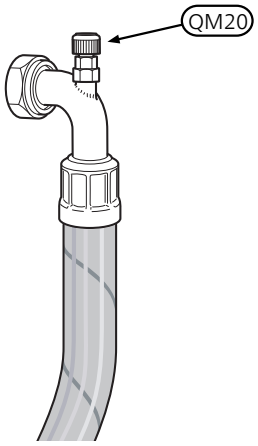

Compressor heater

F2040 is equipped with a compressor heater that heats the compressor before start-up and when the compressor is cold.

NOTE

The compressor heater must have been connected for 6 – 8 hours before the first start, see the section “Start-up and inspection” in the installer manual for the indoor section

Start-up and inspection

1. The compressor heater (CH) must have been operational for at least 6 - 8 hours before the compressor start can be initiated. This is done by switching on the control voltage and disconnecting the communication cable.
2. F2040 must be addressed if it is to have another address than 1. See chapter Addressing via cascade connection, on page 29.
3. The communication cable on the terminal block AA23-X4 must not be connected.
4. Turn the isolator switch on.
5. Ensure that the F2040 is connected to the power source.
6. After 6 – 8 hours the communication cable (W2) is connected to terminal block AA23-X4.
7. Restart the indoor module. Follow the instructions for "Start-up and inspection" in the installation manual for the indoor module.

The heat pump starts 30 minutes after the outdoor unit is powered and the communication cable (W2) is connected, if necessary.

If scheduled**silent operation** is required, it must be scheduled in the inner section or control module.

Caution

Silent mode should only be scheduled periodically because the maximum output is limited to approx. the nominal values.

Caution

Do not start any electrical work until at least two minutes after cutting the power.

F2040-8

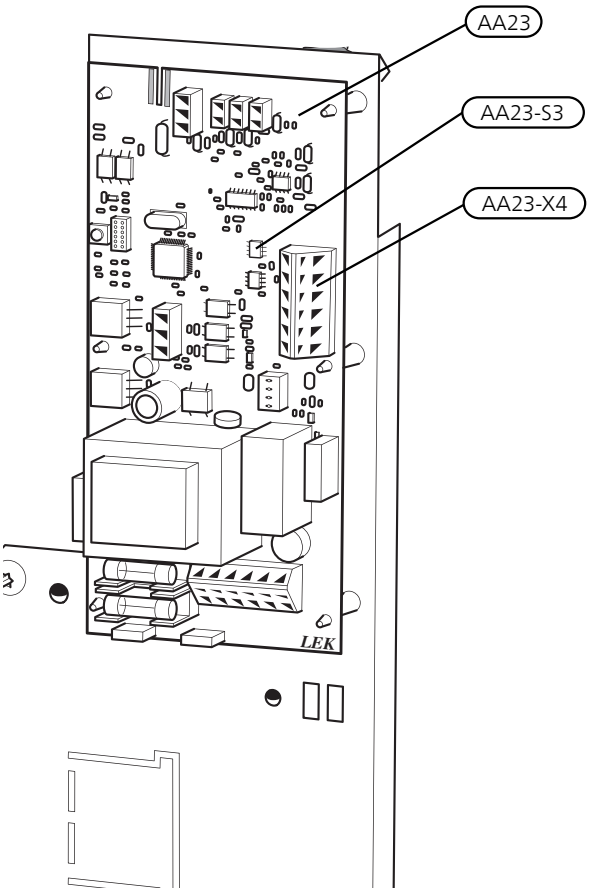

F2040-12

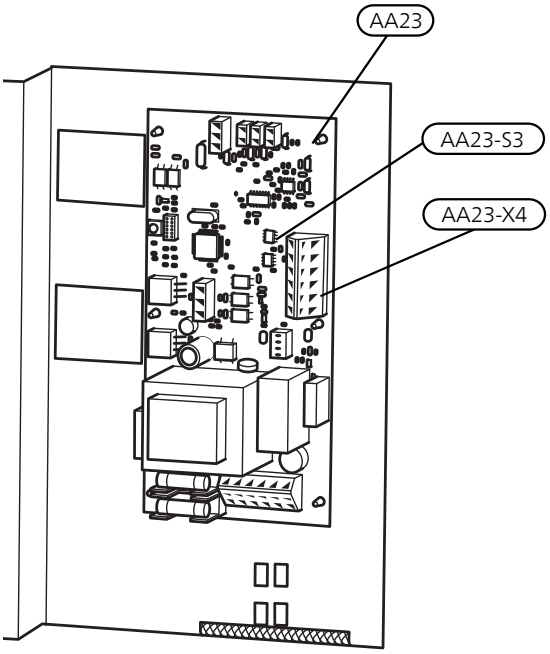

F2040-16

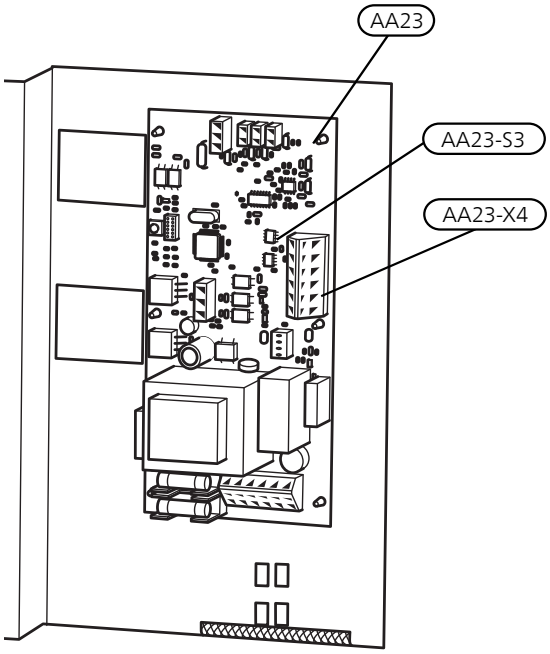

Readjusting, heating medium side

Air is initially released from the hot water and venting may be necessary. If bubbling sounds can be heard from the heat pump, the circulation pump and radiators the entire system will require further venting. When the system is stable (correct pressure and all air eliminated) the automatic heating control system can be set as required.

Adjustment, charge flow

Instructions for adjusting hot water charging are in the installation manual for the respective indoor section. See page 42 for the list of the indoor sections and accessories that can be used with F2040.

7 Control

Menu 5.11.1.1 – Heat pump EB101

These settings are made on the display in the indoor module.

Cooling permitted

Here you can set whether the cooling function is to be activated for the heat pump.

Silent mode permitted

Set whether silent mode is to be activated for the heat pump here.

Current limit

Set whether the current limiting function is to be activated for the heat pump here. During active function you can limit the value of the maximum current.

Setting range: 6 – 32 A

Factory setting: 32 A

Stop temperature compressor

Here you can limit the value for set outdoor temperature down to the value the heat pump is to work.

Setting range -20 – -2 °C

Factory setting -20 °C

blockFreq 1

Select a frequency range within which the heat pump may work here.

blockFreq 2

Select a frequency range within which the heat pump may work here.

8 Disturbances in comfort

Troubleshooting

NOTE
Work behind covers secured by screws may only be carried out by, or under the supervision of, a qualified installation engineer.

NOTE
As F2040 can be connected to a large number of external units, these should also be checked.

NOTE
In the event of action to rectify malfunctions that require work within screwed hatches the incoming electricity must isolated at the safety switch.

NOTE
The alarm is acknowledged on the indoor module or by the voltage to the heat pump being interrupted and then restarted.

The following tips can be used to rectify comfort disruption:

Basic actions

Start by checking the following possible fault sources:
- That the heat pump is running or that the supply cable to F2040 is connected.
- Group and main fuses of the accommodation.
- The property's earth circuit breaker.
- The heat pump's motor circuit breaker (F).

Low hot water temperature or a lack of hot water

This part of the fault-tracing chapter only applies if the heat pump is docked to the hot water heater.
- Large hot water consumption.
  - Wait until the hot water has heated up.
- Incorrect settings in the indoor module.
  - See the manual for the indoor module.

Low room temperature
- Closed thermostats in several rooms.
  - Set the thermostats to max in as many rooms as possible.
- External switch for changing the room heating activated.
  - Check any external switches.
- Incorrect settings in indoor module.
  - See the manual for the indoor module.

High room temperature
- External switch for changing the room heating activated.
  - Check any external switches.
- Incorrect settings in indoor module.
  - See the manual for the indoor module.

F2040 not in operation

F2040 communicates all alarms to the indoor module.
- Ensure that the F2040 is connected to the power source.
- Check the indoor module. See section "Disturbances in comfort" in the installation manual for the indoor module.

F2040 does not communicate
- Check that the addressing of F2040 is correct.
- Check that the communication cable has been connected.

Sensor placement

F2040-8

Connection to card (PWB1)

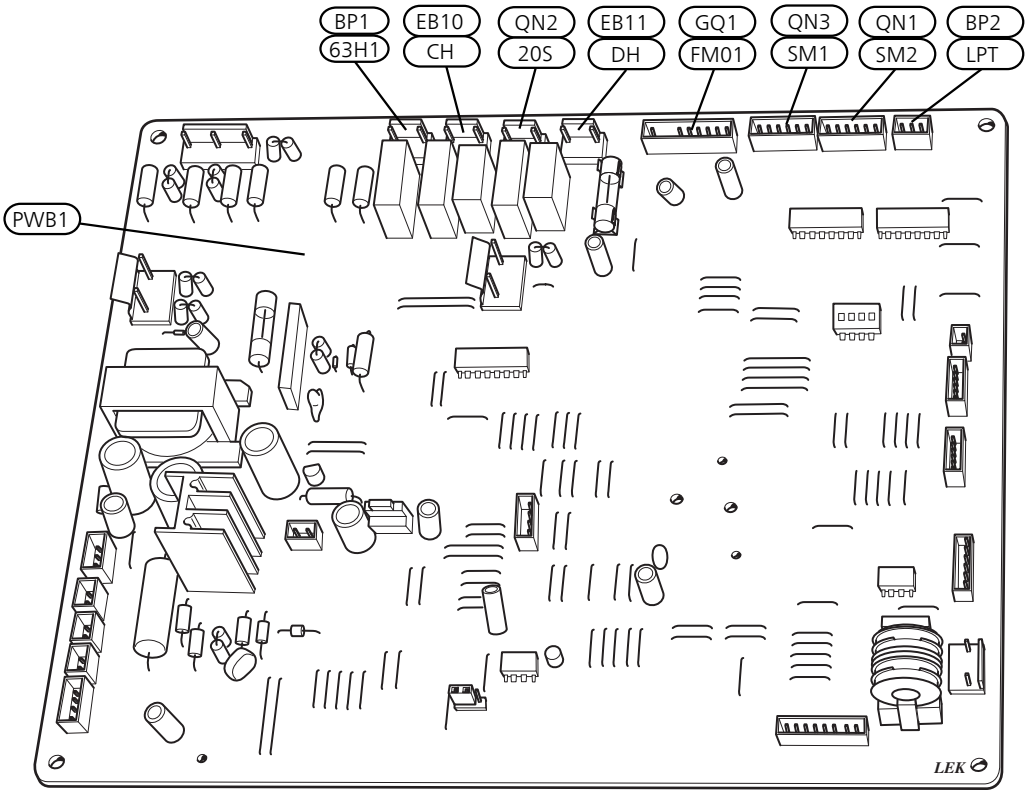

F2040-12 /F2040-16

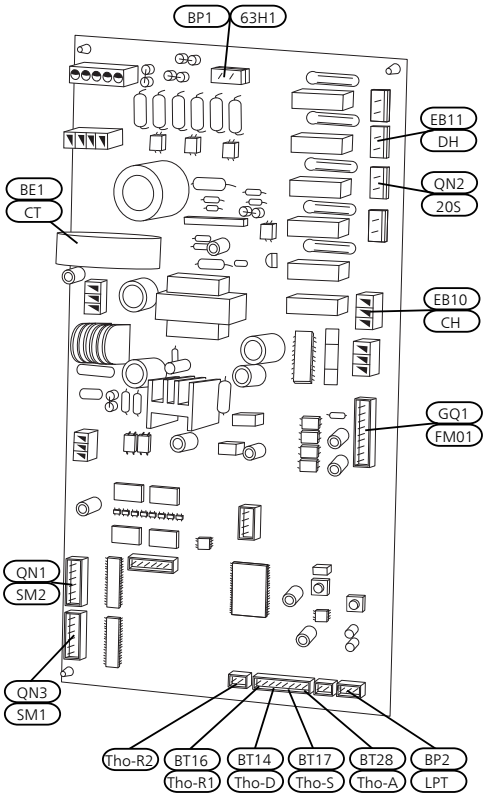

Sensors etc.

BE1 (CT)	Current sensor
BP1 (63H1)	High pressure pressostat
BP2 (LPT)	Low pressure transmitter
BP4	Pressure sensor, condenser
BT3	Temperature sensor, heating medium return line
BT12	Temperature sensor, condenser supply line
BT14 (Tho-D)	Temperature sensor, hot gas
BT15	Temperature sensor, fluid pipe
BT16 (Tho-R1)	Temperature sensor, heat exchanger, 1
BT17 (Tho-S)	Temperature sensor, suction gas
BT28 (Tho-A)	Temperature sensor, ambient
EB10 (CH)	Compressor heater
EB11 (DH)	Drip tray heater
EP2	Condenser
GQ1 (FM01)	Fan
GQ10 (CM)	Compressor
HS1	Drying filter
QN1 (SM2)	Expansion valve, heating
QN2 (20S)	4-way valve
QN3 (SM1)	Expansion valve, cooling
Tho-R2	Temperature sensor, heat exchanger, 2

Connection to card (AA23)

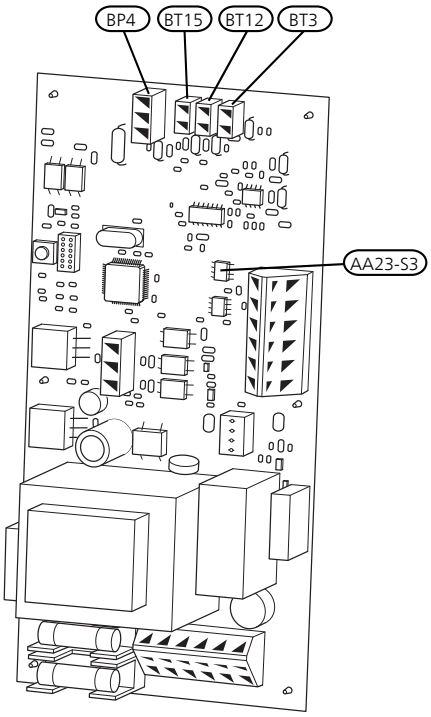

Sensor placement in F2040

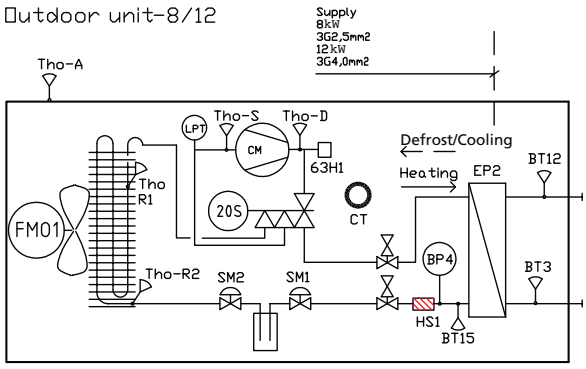

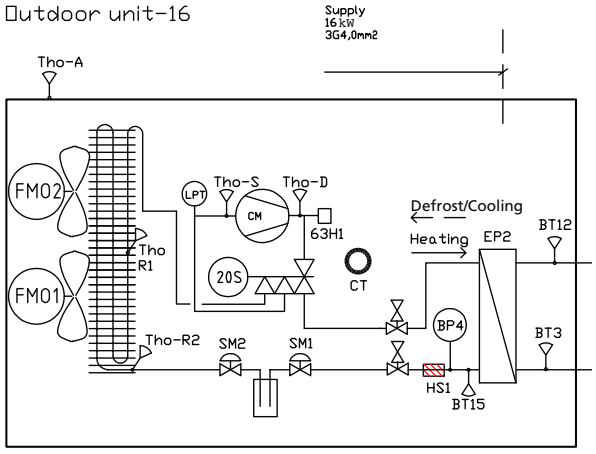

Data for temperature sensor in F2040

Tho-D

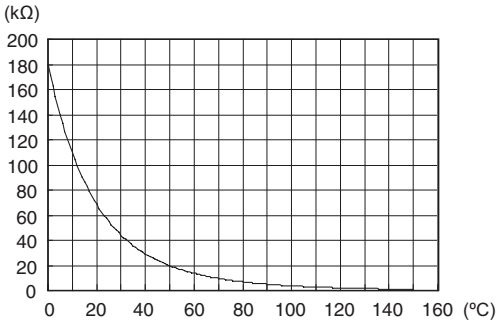

Tho-S, Tho-R1, Tho-R2

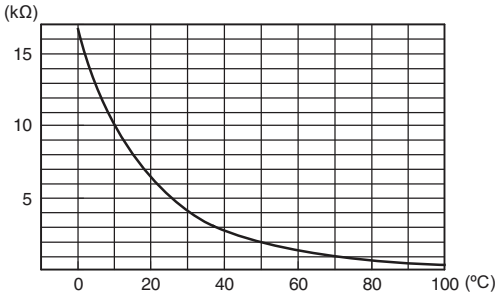

Tho-A

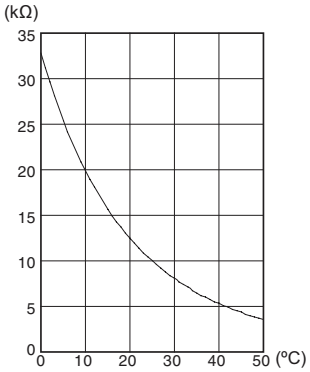

Data for return line temperature sensor (BT3), condensor supply (BT12) and fluid pipe (BT15)

Temperature (°C)	Resistance (kOhm)	Voltage (VDC)
-40	351.0	3.256
-35	251.6	3.240
-30	182.5	3.218
-25	133.8	3.189
-20	99.22	3.150
-15	74.32	3.105
-10	56.20	3.047
-5	42.89	2.976
0	33.02	2.889
5	25.61	2.789
10	20.02	2.673
15	15.77	2.541
20	12.51	2.399
25	10.00	2.245
30	8.045	2.083
35	6.514	1.916
40	5.306	1.752
45	4.348	1.587
50	3.583	1.426
55	2.968	1.278
60	2.467	1.136
65	2.068	1.007
70	1.739	0.891
75	1.469	0.785
80	1.246	0.691
85	1.061	0.607
90	0.908	0.533
95	0.779	0.469
100	0.672	0.414

9 Alarm list

Alarm	Alarm text on the display	Description	May be due to
3	Sensor fault BT3	Sensor fault, Sensor incoming water in F2040 (BT3).	■ Open circuit or short circuit on sensor input ■ Sensor does not work (see section "Disturbances in comfort") ■ Defective control board AA23 in F2040
12	Sensor fault BT12	Sensor fault, Sensor outgoing water in F2040 (BT12).	■ Open circuit or short circuit on sensor input ■ Sensor does not work (see section "Disturbances in comfort") ■ Defective control board AA23 in F2040
15	Sensor fault BT15	Sensor fault, Sensor fluid pipe in F2040 (BT15).	■ Open circuit or short circuit on sensor input ■ Sensor does not work (see section "Disturbances in comfort") ■ Defective control board AA23 in F2040
162	High condenser out	Too high temperature out from the condenser. Self-resetting.	■ Low flow during heating operation ■ Too high set temperatures
163	High condenser in	Too high temperature into the condenser. Self-resetting.	■ Temperature generated by another heat source
183	Defrosting in progress	Not an alarm, but an operating status.	■ Set when the heat pump runs the defrosting procedure
220	HP alarm	The high pressure switch (63H1) deployed 5 times within 60 minutes or for 60 minutes continuously.	■ Insufficient air circulation or blocked heat exchanger ■ Open circuit or short circuit on input for high pressure switch (63H1) ■ Defective high pressure switch ■ Expansion valve not correctly connected ■ Service valve closed ■ Defective control board in F2040 ■ Low or no flow during heating operation ■ Defective circulation pump ■ Defective fuse, F(4A)
221	LP alarm	Too low value on the low pressure sensor 3 times within 60 minutes.	■ Open circuit or short circuit on input for low pressure sensor ■ Defective low pressure sensor ■ Defective control board in AMS 10 ■ Open circuit or short circuit on input for suction gas sensor (Tho-S) ■ Defective suction gas sensor (Tho-S)
223	OU Com. error	Communication between the control board and the communication board is interrupted. There must be 22 volt direct current (DC) at the switch CNW2 on the control board (PWB1).	■ Any circuit breakers for AMS 10 off ■ Incorrect cable routing

Alarm	Alarm text on the display	Description	May be due to
224	Fan alarm	Deviations in the fan speed in F2040.	■ The fan cannot rotate freely ■ Defective control board in F2040 ■ Defective fan motor ■ Control board in F2040 dirty ■ Fuse (F2) blown
230	Continuously high hot gas	Temperature deviation on the hot gas sensor (Tho-D) twice within 60 minutes or for 60 minutes continuously.	■ Sensor does not work (see section "Ambient temperature sensor") ■ Insufficient air circulation or heat exchanger ■ Blocked ■ If the fault persists during cooling, there may be an insufficient amount of refrigerant. ■ Defective control board in F2040
254	Communication error	Communication fault with accessory board	■ F2040 not powered ■ Fault in the communication cable.
261	High temperature in heat exchanger	Temperature deviation on the heat exchanger sensor (Tho-R1/R2) five times within 60 minutes or for 60 minutes continuously.	■ Sensor does not work (see section "Disturbances in comfort") ■ Insufficient air circulation or blocked heat exchanger ■ Defective control board in F2040 ■ Too much refrigerant
262	Power transistor too hot	When IPM (Intelligent power module) displays FO-signal (Fault Output) five times during a 60-minute period.	■ Can occur when 15V power supply to the inverter PCB is unstable.
263	Inverter error	Voltage from the inverter outside the parameters four times within 30 minutes.	■ Incoming power supply interference ■ Service valve closed ■ Insufficient amount of refrigerant ■ Compressor fault ■ Defective circuit board for inverter in F2040
264	Inverter error	Communication between circuit board for inverter and control board broken.	■ Open circuit in connection between boards ■ Defective circuit board for inverter in F2040 ■ Defective control board in F2040
265	Inverter error	Continuous deviation on power transistor for 15 minutes.	■ Defective fan motor ■ Defective circuit board for inverter in AMS 10
266	Insufficient refrigerant	Insufficient refrigerant is detected upon start-up in cooling mode.	■ Service valve closed ■ Loose connection sensor (BT15, BT3) ■ Defective sensor (BT15, BT3) ■ Too little refrigerant
267	Inverter error	Failed start for compressor	■ Defective circuit board for inverter in F2040 ■ Defective control board in F2040 ■ Compressor fault

Alarm	Alarm text on the display	Description	May be due to
268	Inverter error	Overcurrent, Inverter A/F module	■ Sudden power failure
271	Cold outdoor air	Temperature of BT28 below the value that permits operation	■ Cold weather conditions ■ Sensor fault
272	Hot outdoor air	Temperature of BT28 above the value that permits operation	■ Warm weather conditions ■ Sensor fault
277	Sensor fault Tho-R	Sensor fault, heat exchanger in F2040(Tho-R).	■ Open circuit or short circuit on sensor input ■ Sensor does not work (see section "Disturbances in comfort") ■ Defective control board in F2040
278	Sensor fault Tho-A	Sensor fault, outdoor temperature sensor in F2040 (Tho-A).	■ Open circuit or short circuit on sensor input ■ Sensor does not work (see section "Disturbances in comfort") ■ Defective control board in F2040
279	Sensor fault Tho-D	Sensor fault, hot gas in F2040 (Tho-D).	■ Open circuit or short circuit on sensor input ■ Sensor does not work (see section "Disturbances in comfort") ■ Defective control board in F2040
280	Sensor fault Tho-S	Sensor fault, suction gas in F2040 (Tho-S).	■ Open circuit or short circuit on sensor input ■ Sensor does not work (see section "Disturbances in comfort") ■ Defective control board in F2040
281	Sensor fault LPT	Sensor fault, low pressure transmitter in F2040.	■ Open circuit or short circuit on sensor input ■ Sensor does not work (see section "Disturbances in comfort") ■ Defective control board in F2040 ■ Fault in the refrigerant circuit
294	Non-compatible outdoor air heat pump	Heat pump and indoor module do not work properly together due to technical parameters.	■ Outdoor module and indoor module are not compatible.
404	Sensor fault BP4	Sensor fault, Sensor high pressure heating/low pressure cooling in F2040 (BP4).	Open circuit or short circuit on sensor input Sensor does not work (see section "Disturbances in comfort") Defective control board AA23 in F2040

10 Accessories

Condensation water pipe

Condensation water pipe, different lengths.
Earth circuit breaker 1-phase.

KVR 10-10 F2040

1 metres
Part no. 067 233

KVR 10-30 F2040

2.5 metres
Part no. 067 235

KVR 10-60 F2040

5 metres
Part no. 067 237

Ground stand

Ground stand F2040-8

Part no. 015 295

Ground stand F2040-12 /-16

Part no. 015 268

Indoor module

VVM 310

Part no. 069 430

VVM 310

With integrated EMK 310
Part no. 069 084

VVM320

Copper, 3 x 400 V
Part no. 069 108
Stainless Steel, 3 x 400 V
Part no. 069 109
Enamel, 3 x 400 V
With integrated EMK 300
Part no. 069 110
Stainless Steel, 3 x 230 V
Part no. 069 113
Stainless Steel, 1 x 230 V
Part no. 069 111
Stainless Steel, 1 x 230 V
With T&P valve
Part no. 069 112

VVM 500

Part no. 069 400

SMO 20

Control module
Part no. 067 224

SMO 40

Control module
Part no. 067 225

Wall mounting

Wall mounting F2040-8

Part no. 067 210

Wall mounting F2040-12

Part no. 067 210

Water heater/Accumulator tank

VPA 300/200

Water heater with double-jacketed vessel.

Copper	Part no. 088 710
Enamel	Part no. 088 700

VPA 450/300

Water heater with double-jacketed vessel.

Copper	Part no. 088 660
Enamel	Part no. 088 670

VPB 200

Water heater with charge coil.

Copper	Part no. 088 515
Enamel	Part no. 088 517
Stainless steel	Part no. 088 518

VPB 300

Hot water heater with charge coil

Copper	Part no. 083 009
Enamel	Part no. 083 011
Stainless steel	Part no. 083 010

VPB 500

Copper lined water heater with charge coil
Part no. 083 220

VPB 750-2

Copper lined water heater with charge coil
Part no. 083 231

VPB 1000

Copper lined water heater with charge coil
Part no. 083 240

VPAS 300/450

Water heater with double-jacketed vessel and solar coil.

Copper	Part no. 087 720
Enamel	Part no. 087 710

11 Technical data

Dimensions and setting-out coordinates

F2040-8

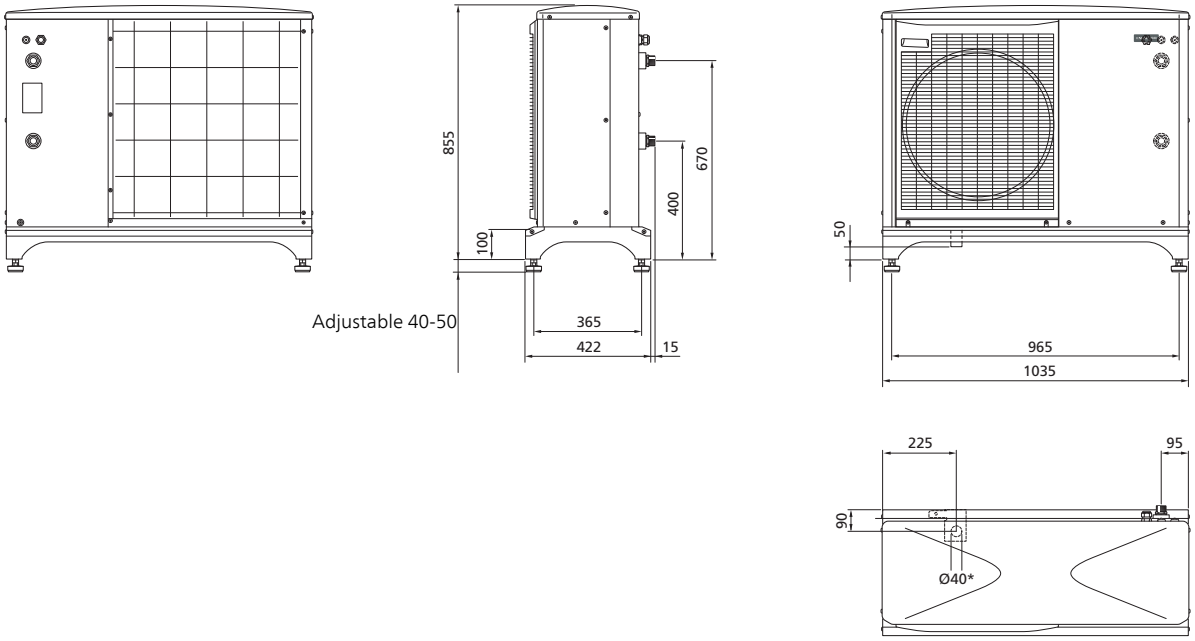

* Accessory KVR 10 is required.

F2040-12

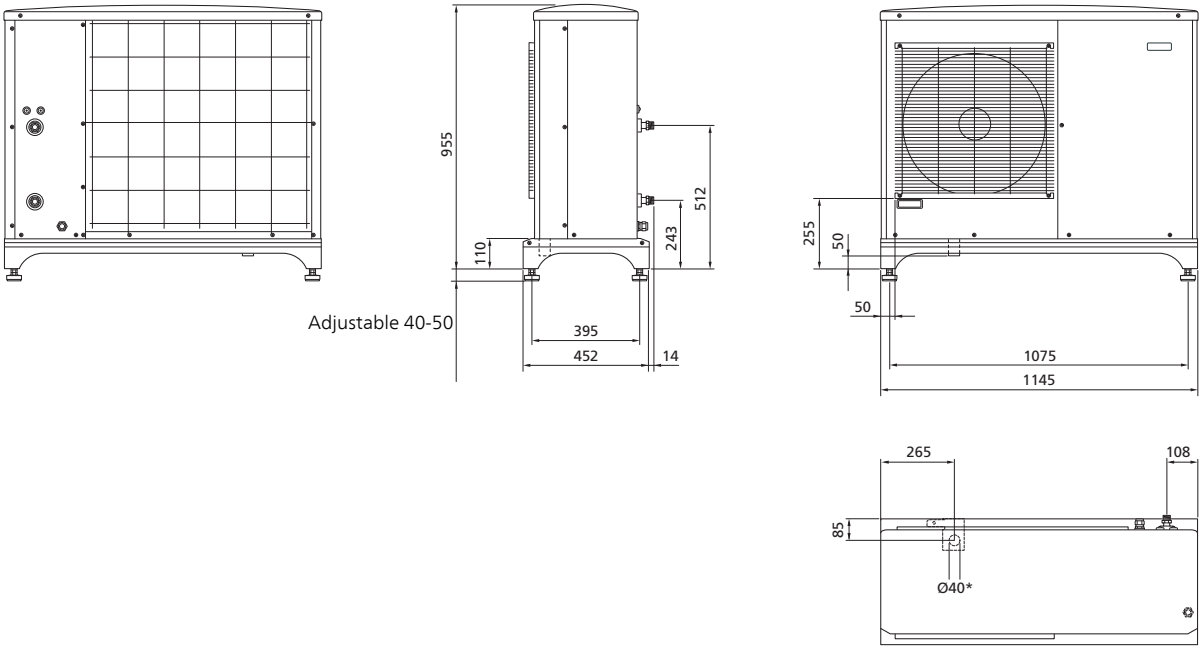

* Accessory KVR 10 is required.

F2040-16

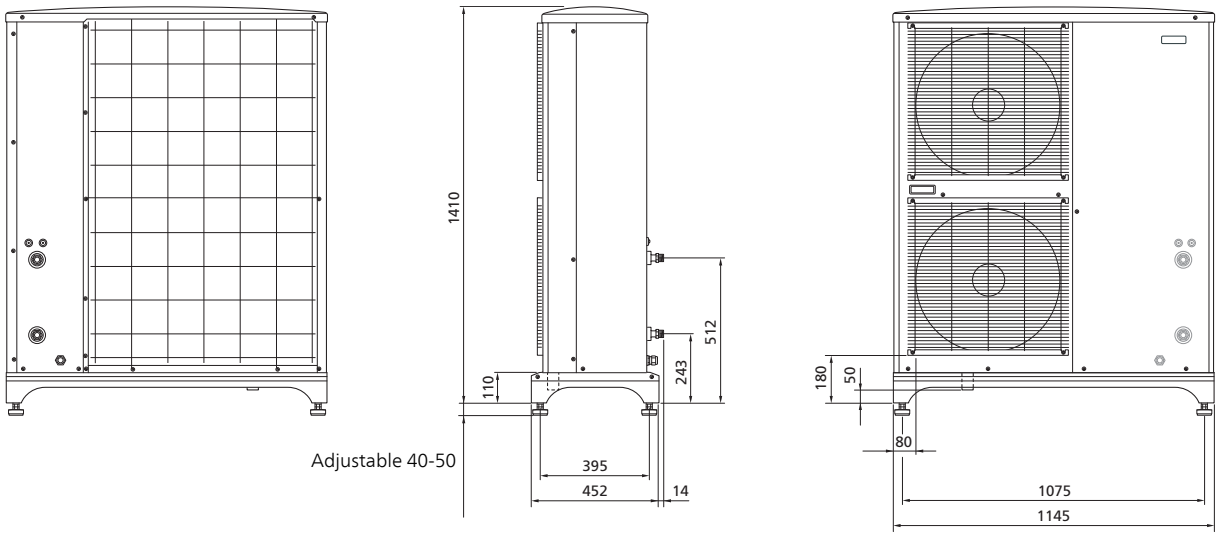

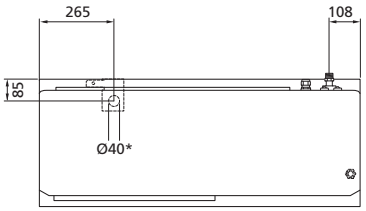

* Accessory KVR 10 is required.

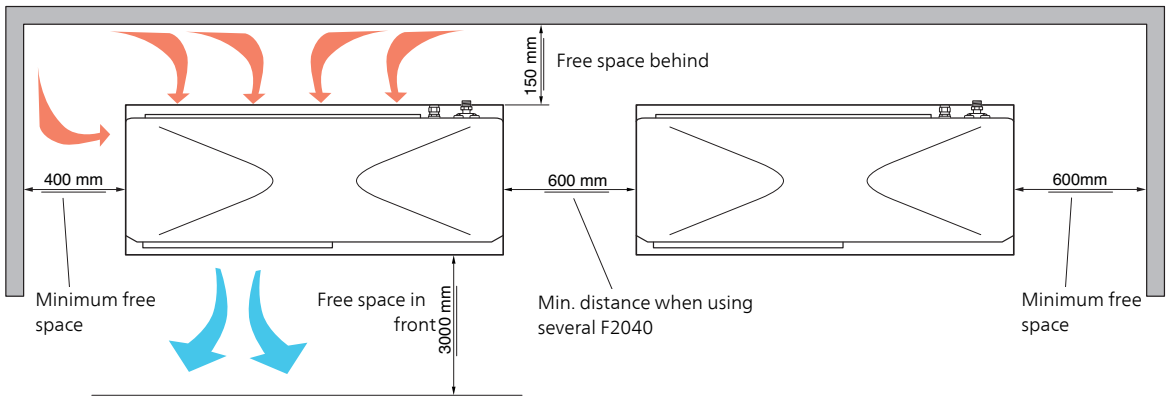

Sound pressure levels

F2040 is usually placed next to a house wall, which gives a directed sound distribution that should be considered. Accordingly, you should always attempt when positioning to choose the side that faces the least sound sensitive neighbouring area.

The sound pressure levels are further affected by walls, bricks, differences in ground level, etc and should therefore only be seen as guide values.

F2040 adjusts the fan speed depending on the ambient temperature and evaporation temperature.

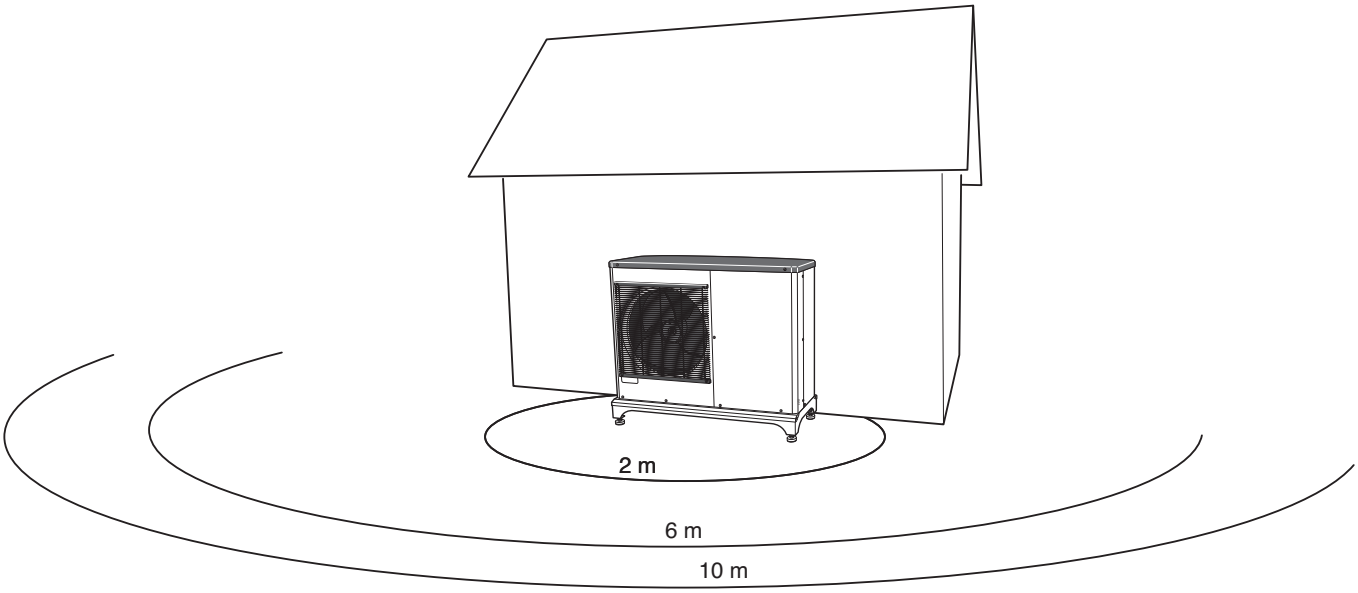

Air-water heat pump		F2040-8	F2040-12	F2040-16
Sound power level* According to EN12102 at 7/45 (nominal)	L_W(A)	54	57	61
Sound pressure level at 2 m free standing.*	dB(A)	40	43	47
Sound pressure level at 6 m free standing.*	dB(A)	30.5	33.5	37.5
Sound pressure level at 10 m free standing.*	dB(A)	26	29	33

* Free space.

Technical specifications

Air-water heat pump		F2040-8	F2040-12	F2040-16
Heating	Outd. temp: / Supply temp.	Nominal	Nominal	Nominal
Output data according to EN14511 ΔT5K Specified/supplied power/COP (kW/kW/-)	7/35 °C (floor)	3.86/0.83/4.65	5.21/1.09/4.78	7.03/1.45/4.85
	2/35 °C (floor)	5.11/1.36/3.76	6.91/1.79/3.86	9.33/2.38/3.92
	-7/35 °C (floor)	6.64/2.48/2.68	8.98/3.26/2.75	12.12/4.33/2.80
	2/55 °C	4.75/2.07/2.29	6.42/2.72/2.36	8.67/3.62/2.40
	7/45 °C	3.70/1.00/3.70	5.00/1.31/3.82	6.75/1.74/3.88
	2/45 °C	5.03/1.70/2.96	6.80/2.24/3.04	9.18/2.98/3.08
	-7/45 °C	6.58/3.06/2.15	8.90/4.03/2.21	12.01/5.36/2.24
	-15/45 °C	5.13/3.03/1.69	6.94/3.99/1.74	9.36/5.31/1.76
	7/55 °C	3.50/1.17/2.99	4.73/1.54/3.07	6.38/2.04/3.13
	-7/55 °C	5.29/2.68/1.97	7.15/3.53/2.03	9.66/4.69/2.06
Cooling	Outd. temp: / Supply temp.	Max	Max	Max
Output data according to EN14511 ΔT5K Specified/supplied power/EER	27/7 °C	7.52/2.37/3.17	9.87/3.16/3.13	13.30/3.99/3.33
	27/18 °C	11.20/3.20/3.50	11.70/3.32/3.52	17.70/4.52/3.91
	35/7 °C	7.10/2.65/2.68	9.45/3.41/2.77	13.04/4.53/2.88
	35/18 °C	9.19/2.98/3.08	11.20/3.58/3.12	15.70/5.04/3.12
Electrical data				
Rated voltage		230V 50 Hz, 230V 2AC 50Hz		
Max operating current, heat pump	A_{rms}	16	23	25
Max operating current, compressor	A_{rms}	15	22	24
Starting current	A_{rms}	5	5	5
Nominal output, fan	W	86	86	2 x 86
Fuse[1)]	A_{rms}	16	25	25
Refrigerant circuit				
Type of refrigerant		R410A		
Type of compressor		Twin Rotary		
Compressor oil		M-MA68		
Volume	kg	2.55	2.9	4.0
Cut-out value pressostat HP	MPa	4.15 (41.5 bar)		
Cut-out value pressostat LP	MPa	0.079 (0.79 bar)		
Brine				
Airflow	m^3/h	3000	4380	6000
Max/Min air temp	°C	-20/43		
Defrosting system		reverse cycle		
Heating medium				
Min/Max system pressure heating medium	MPa	0.05/0.25 (0.5/2.5bar)		
Min volume, climate system, heating/cooling	l	50	80	150
Min volume, climate system, under floor cooling	l	80	100	150
Max flow, climate system	l/s	0.38	0.57	0.79
Min flow, climate system, at 100% circulation pump speed (defrosting flow)	l/s	0.19	0.29	0.39
Min flow, heating	l/s	0.12	0.15	0.25

Air-water heat pump		F2040-8	F2040-12	F2040-16
Min flow, cooling	l/s	0.15	0.20	0.32
Max/Min heating medium temp continuous operation	°C	58/25		
Connection heating medium ext thread		G1"		
Dimensions and weight				
Width	mm	1035	1145	1145
Depth	mm	422	452	452
Height with stand	mm	895 (+50/-0)	995 (+50/-0)	1450 (+50/-0)
Weight (excl. packaging)	kg	90	105	135
Miscellaneous				
Enclosure class		IP 24		
Colour		dark grey		
Part No.		064 109	064 092	064 108

[1)]Specified output is limited with lower fusing.

Working range, compressor operation - heating

F2040-8 , -12 , -16

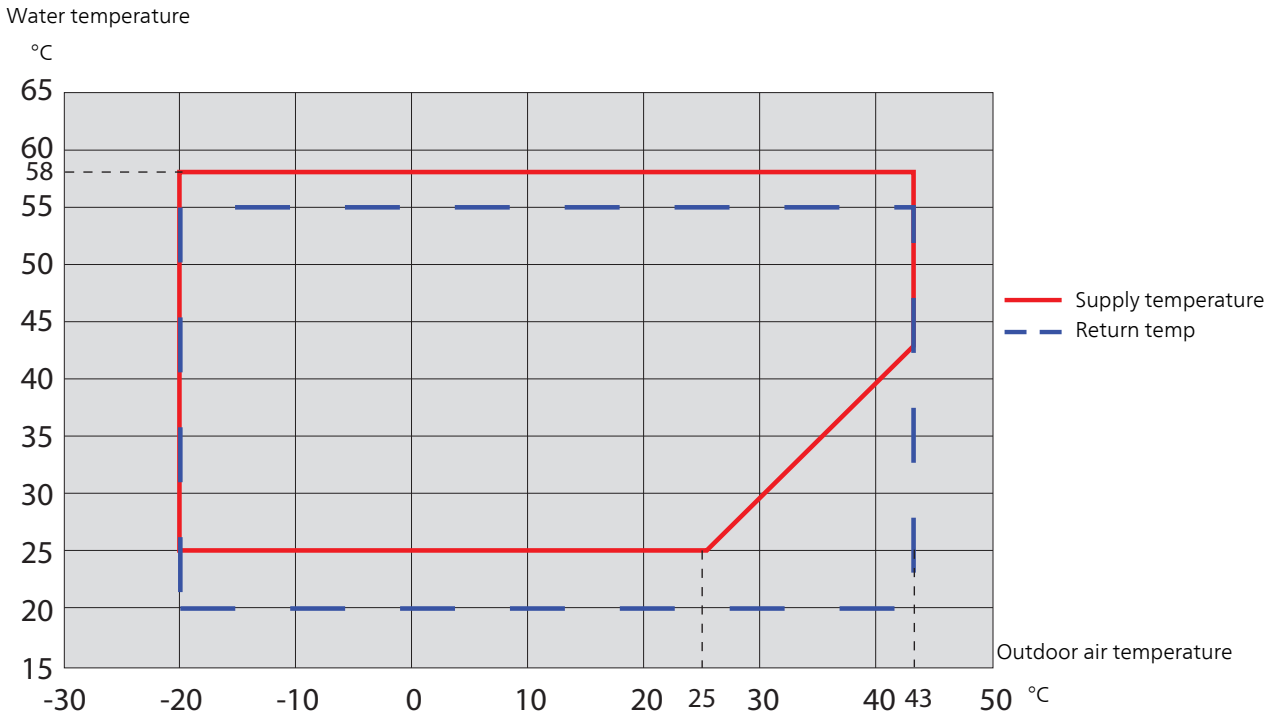

During shorter time it is allowed to have lower working temperatures on the water side, e.g. during start up.

Working range, compressor operation - cooling

F2040-8 , -12 , -16

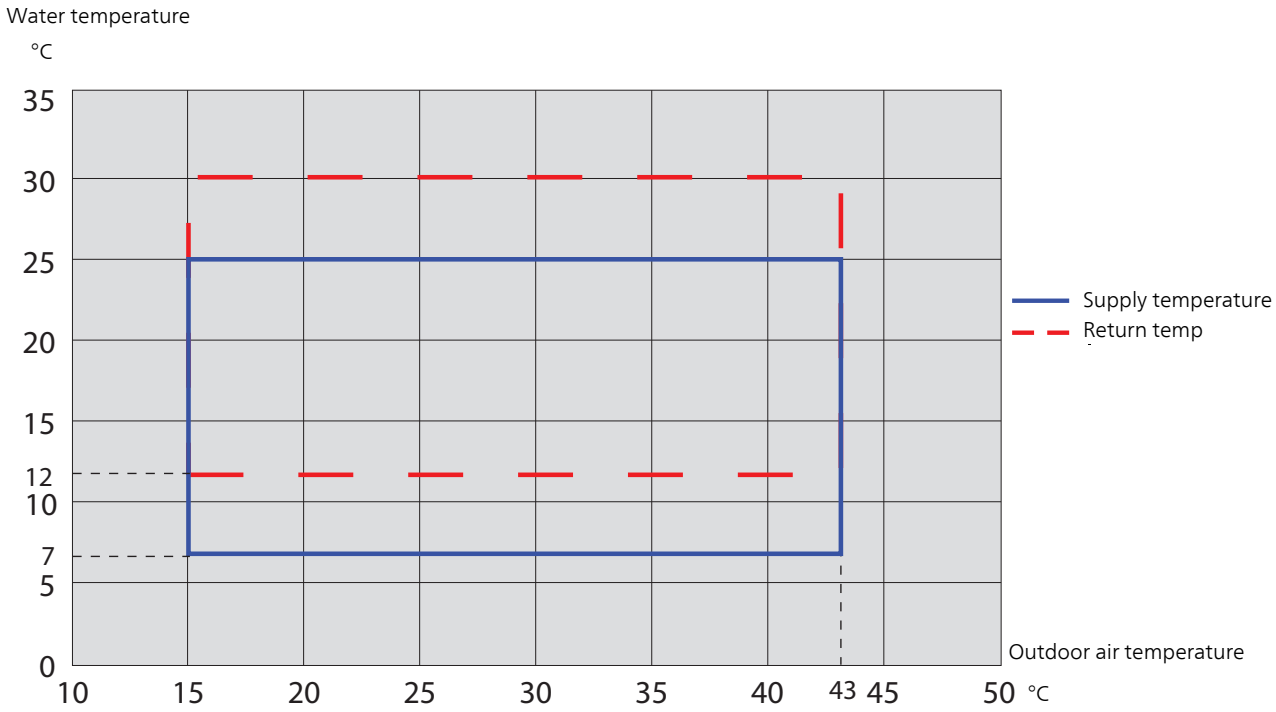

Output and COP at different supply temperatures

F2040-8

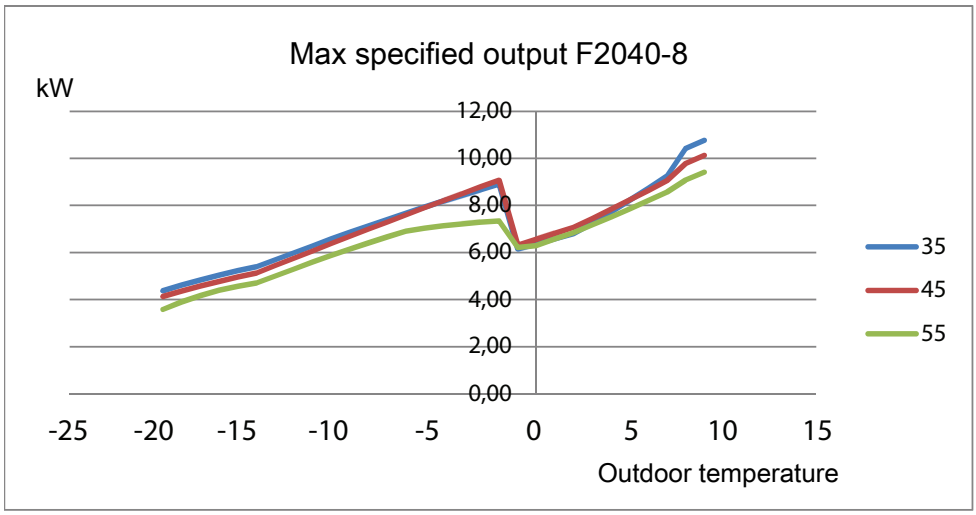

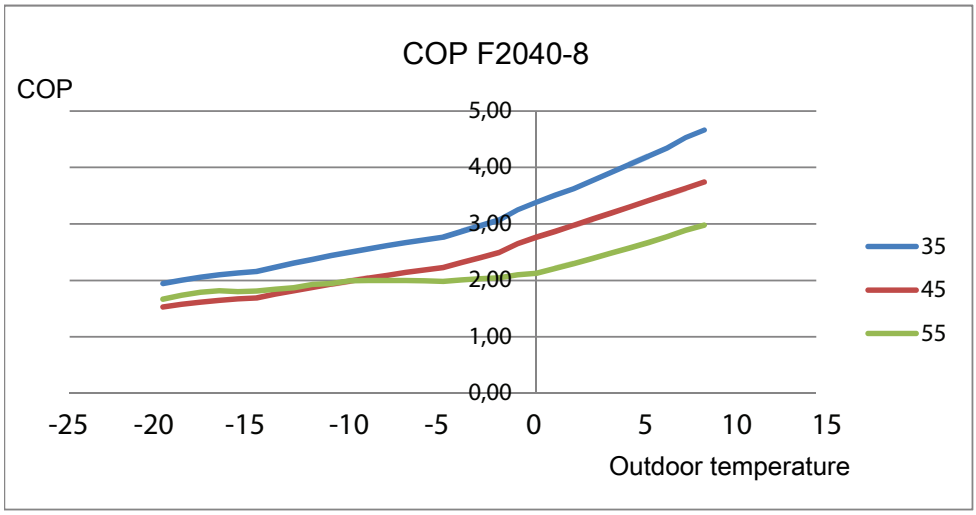

F2040-12

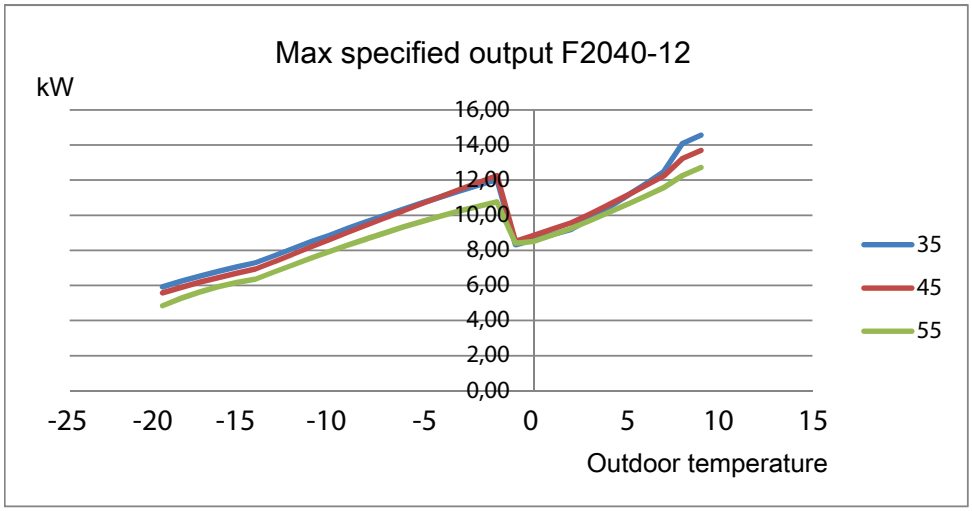
Max specified output F2040-12
kW
16,00
14,00
12,00
10,00
8,00
6,00
4,00
2,00
0,00
-25
-20
-15
-10
-5
0
5
10
15
Outdoor temperature
35
45
55

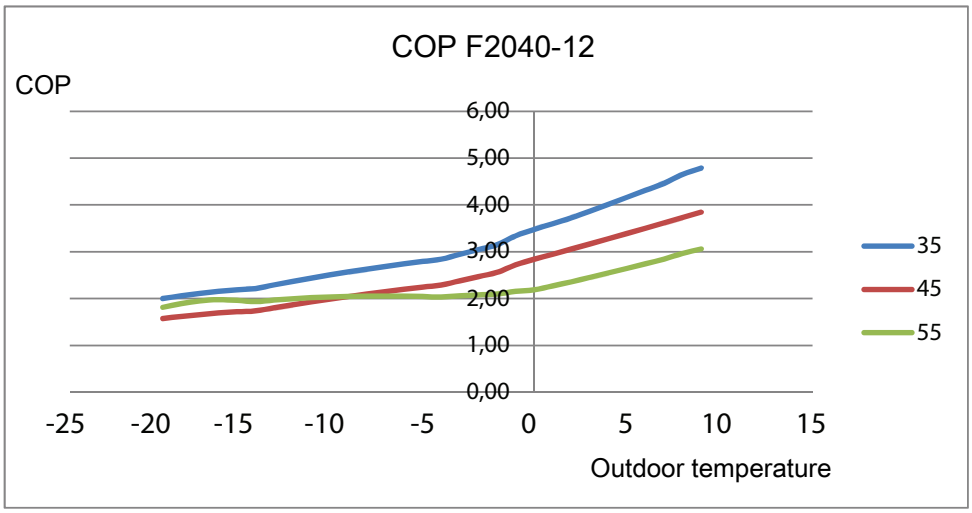
COP F2040-12
COP
6,00
5,00
4,00
3,00
2,00
1,00
0,00
-25
-20
-15
-10
-5
0
5
10
15
Outdoor temperature
35
45
55

F2040-16

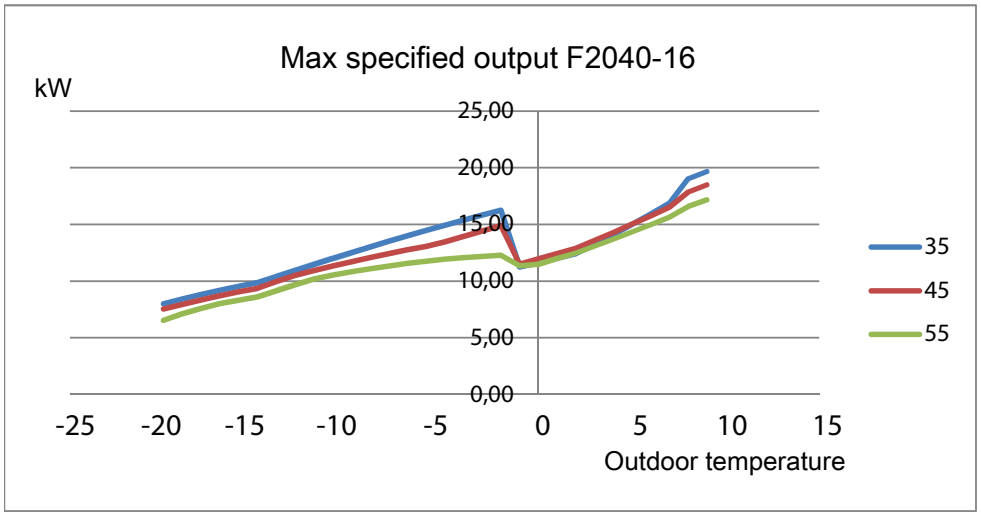
Max specified output F2040-16
kW
25,00
20,00
15,00
10,00
5,00
0,00
-25
-20
-15
-10
-5
0
5
10
15
Outdoor temperature
35
45
55

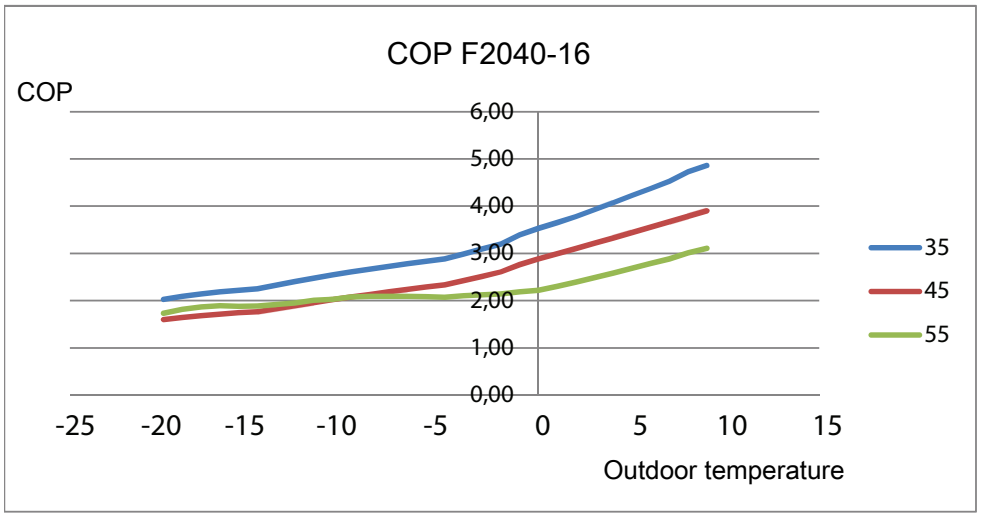
COP F2040-16
COP
6,00
5,00
4,00
3,00
2,00
1,00
0,00
-25
-20
-15
-10
-5
0
5
10
15
Outdoor temperature
35
45
55

Output with lower fuse rating than recommended

F2040-12 /16

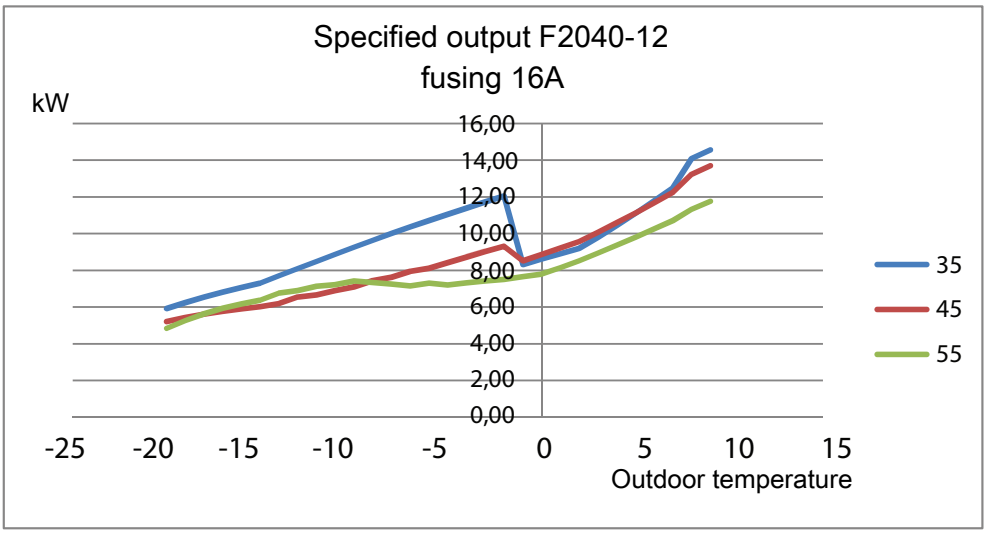

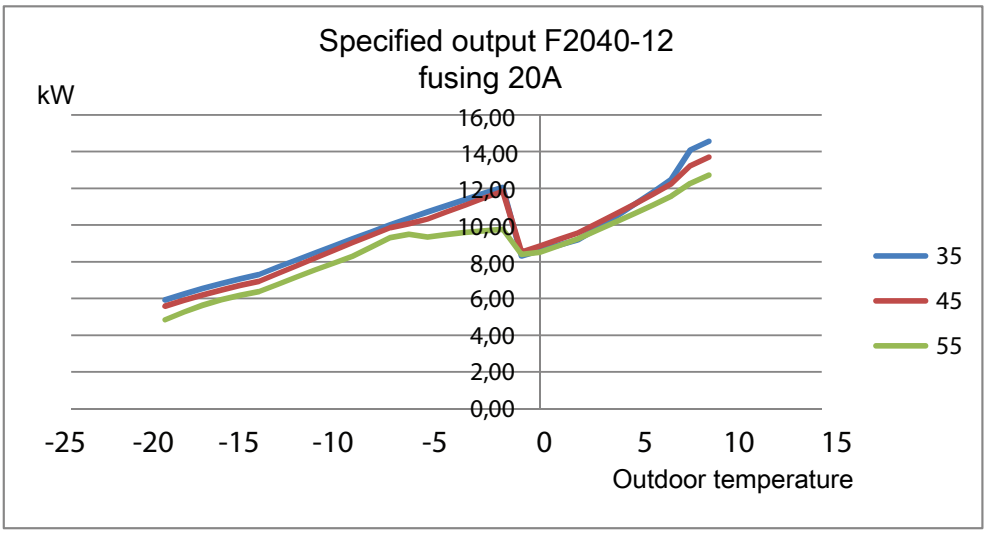

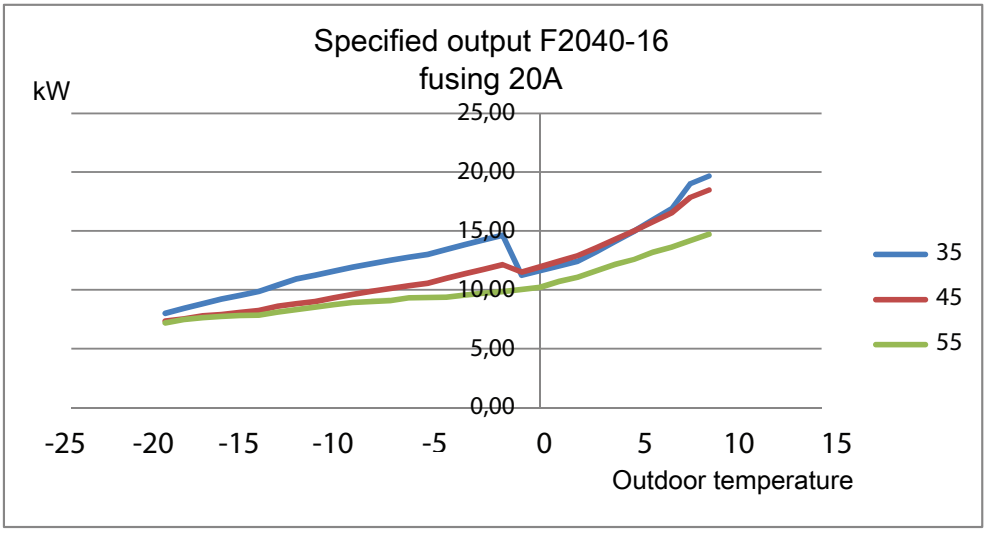

Energy labelling

Information sheet

Supplier		NIBE		
Model		**F2040-8**	**F2040-12**	**F2040-16**
Model hot water heater		**VVM 320**	**VVM 320**	**VVM 310**
Temperature application	**°C**	**35 / 55**	**35 / 55**	**35 / 55**
Declared load profile for water heating		**XL**	**XL**	**XL**
Seasonal space heating energy efficiency class, average climate		**A++ / A++**	**A++ / A++**	**A++ / A++**
Water heating energy efficiency class, average climate		**A**	**A**	**A**
Rated heat output (Pdesignh), average climate	kW	8.2 / 7.0	11.5 / 10.0	14.5 / 14.0
Annual energy consumption space heating, average climate	kWh	3,882 / 4,447	5,382 / 6,136	6,702 / 8,431
Annual energy consumption water heating, average climate	kWh	1,689	1,702	1,702
Seasonal space heating energy efficiency, average climate	%	172 / 127	174 / 132	176 / 134
Water heating energy efficiency, average climate	%	99	98	98
Sound power level L_{WA} indoors	dB	35	35	35
Rated heat output (Pdesignh), cold climate	kW	9.0 / 10.0	11.5 / 13.0	15.0 / 16.0
Rated heat output (Pdesignh), warm climate	kW	8.0 / 8.0	12.0 / 12.0	15.0 / 15.0
Annual energy consumption space heating, cold climate	kWh	6,264 / 8,844	7,798 / 11,197	10,040 / 13,629
Annual energy consumption water heating, cold climate	kWh	1,886	1,904	1,904
Annual energy consumption space heating, warm climate	kWh	1,879 / 2,333	2,759 / 3,419	3,370 / 4,183
Annual energy consumption water heating, warm climate	kWh	1,540	1,551	1,551
Seasonal space heating energy efficiency, cold climate	%	139 / 108	142 / 111	144 / 113
Water heating energy efficiency, cold climate	%	89	88	88
Seasonal space heating energy efficiency, warm climate	%	225 / 180	229 / 185	235 / 189
Water heating energy efficiency, warm climate	%	109	108	108
Sound power level L_{WA} outdoors	dB	54	57	61

Data for energy efficiency of the package

Model		**F2040-8**	**F2040-12**	**F2040-16**
Model hot water heater		**VVM 320**	**VVM 320**	**VVM 310**
Temperature application	**°C**	**35 / 55**	**35 / 55**	**35 / 55**
Controller, class		VI		
Controller, contribution to efficiency	%	4.0		
Seasonal space heating energy efficiency of the package, average climate	%	176 / 131	178 / 136	180 / 138
Seasonal space heating energy efficiency class of the package, average climate		**A+++ / A++**	**A+++ / A++**	**A+++ / A++**
Seasonal space heating energy efficiency of the package, cold climate	%	143 / 112	146 / 115	148 / 117
Seasonal space heating energy efficiency of the package, warm climate	%	229 / 184	233 / 189	239 / 193

The reported efficiency of the package also takes the controller into account. If an external supplementary boiler or solar heating is added to the package, the overall efficiency of the package should be recalculated.

Technical documentation

Model		F2040-8					
Model hot water heater		**VVM 320**					
Type of heat pump		☒ Air-water ☐ Exhaust-water ☐ Brine-water ☐ Water-water					
Low-temperature heat pump		☐ Yes ☒ No					
Integrated immersion heater for additional heat		☒ Yes ☐ No					
Heat pump combination heater		☒ Yes ☐ No					
Climate		☒ Average ☐ Cold ☐ Warm					
Temperature application		☒ Average (55 °C) ☐ Low (35 °C)					
Applied standards		EN14825 / EN16147					
Rated heat output	Prated	7.0	kW	**Seasonal space heating energy efficiency**	η_s	127	%
Declared capacity for space heating at part load and at outdoor temperature Tj				*Declared coefficient of performance for space heating at part load and at outdoor temperature Tj*			
Tj = -7 °C	Pdh	6.3	kW	Tj = -7 °C	COPd	1.94	kW
Tj = +2 °C	Pdh	3.9	kW	Tj = +2 °C	COPd	3.11	kW
Tj = +7 °C	Pdh	2.6	kW	Tj = +7 °C	COPd	4.42	kW
Tj = +12 °C	Pdh	3.7	kW	Tj = +12 °C	COPd	5.93	kW
Tj = biv	Pdh	6.6	kW	Tj = biv	COPd	1.83	kW
Tj = TOL	Pdh	5.9	kW	Tj = TOL	COPd	1.86	kW
Tj = -15 °C (if TOL < -20 °C)	Pdh		kW	Tj = -15 °C (if TOL < -20 °C)	COPd		kW
Bivalent temperature	T_{biv}	-8.6	°C	Min. outdoor air temperature	TOL	-10	°C
Cycling interval capacity	Pcych		kW	Cycling interval efficiency	COPcyc		-
Degradation coefficient	Cdh	0.97	-	Max supply temperature	WTOL	58.0	°C
Power consumption in modes other than active mode				*Additional heat*			
Off mode	P_{OFF}	0.002	kW	Rated heat output	Psup	1.1	kW
Thermostat-off mode	P_{TO}	0.010	kW				
Standby mode	P_{SB}	0.015	kW	Type of energy input	Electric		
Crankcase heater mode	P_{CK}	0.030	kW				
Other items							
Capacity control	Variable			Rated airflow (air-water)		3,000	m^3/h
Sound power level, indoors/outdoors	L_{WA}	35 / 54	dB	Nominal heating medium flow		0.60	m^3/h
Annual energy consumption	Q_{HE}	4,447	kWh	Brine flow brine-water or water-water heat pumps			m^3/h
For heat pump combination heater							
Declared load profile for water heating	XL			**Water heating energy efficiency**	η_{wh}	99	%
Daily energy consumption	Q_{elec}	7.69	kWh	Daily fuel consumption	Q_{fuel}		kWh
Annual energy consumption	AEC	1,689	kWh	Annual fuel consumption	AFC		GJ

Model	F2040-12
Model hot water heater	**VVM 320**
Type of heat pump	☒ Air-water ☐ Exhaust-water ☐ Brine-water ☐ Water-water
Low-temperature heat pump	☐ Yes ☒ No
Integrated immersion heater for additional heat	☒ Yes ☐ No
Heat pump combination heater	☒ Yes ☐ No
Climate	☒ Average ☐ Cold ☐ Warm
Temperature application	☒ Average (55 °C) ☐ Low (35 °C)
Applied standards	EN14825 / EN16147

Rated heat output	Prated	10.0	kW	**Seasonal space heating energy efficiency**	η_s	132	%
Declared capacity for space heating at part load and at outdoor temperature Tj				*Declared coefficient of performance for space heating at part load and at outdoor temperature Tj*			
Tj = -7 °C	Pdh	8.9	kW	Tj = -7 °C	COPd	1.99	kW
Tj = +2 °C	Pdh	5.5	kW	Tj = +2 °C	COPd	3.22	kW
Tj = +7 °C	Pdh	3.5	kW	Tj = +7 °C	COPd	4.61	kW
Tj = +12 °C	Pdh	5.0	kW	Tj = +12 °C	COPd	6.25	kW
Tj = biv	Pdh	9.2	kW	Tj = biv	COPd	1.90	kW
Tj = TOL	Pdh	8.1	kW	Tj = TOL	COPd	1.92	kW
Tj = -15 °C (if TOL < -20 °C)	Pdh		kW	Tj = -15 °C (if TOL < -20 °C)	COPd		kW
Bivalent temperature	T_{biv}	-7.9	°C	Min. outdoor air temperature	TOL	-10	°C
Cycling interval capacity	Pcych		kW	Cycling interval efficiency	COPcyc		-
Degradation coefficient	Cdh	0.98	-	Max supply temperature	WTOL	58.0	°C
Power consumption in modes other than active mode				*Additional heat*			
Off mode	P_{OFF}	0.002	kW	Rated heat output	Psup	1.9	kW
Thermostat-off mode	P_{TO}	0.014	kW				
Standby mode	P_{SB}	0.015	kW	Type of energy input	Electric		
Crankcase heater mode	P_{CK}	0.035	kW				
Other items							
Capacity control	Variable			Rated airflow (air-water)		4,380	m^3/h
Sound power level, indoors/outdoors	L_{WA}	35 / 57	dB	Nominal heating medium flow		0.86	m^3/h
Annual energy consumption	Q_{HE}	6,136	kWh	Brine flow brine-water or water-water heat pumps			m^3/h
For heat pump combination heater							
Declared load profile for water heating	XL			**Water heating energy efficiency**	η_{wh}	98	%
Daily energy consumption	Q_{elec}	7.75	kWh	Daily fuel consumption	Q_{fuel}		kWh
Annual energy consumption	AEC	1,702	kWh	Annual fuel consumption	AFC		GJ

Model		F2040-16					
Model hot water heater		**VVM 310**					
Type of heat pump		☒ Air-water ☐ Exhaust-water ☐ Brine-water ☐ Water-water					
Low-temperature heat pump		☐ Yes ☒ No					
Integrated immersion heater for additional heat		☒ Yes ☐ No					
Heat pump combination heater		☒ Yes ☐ No					
Climate		☒ Average ☐ Cold ☐ Warm					
Temperature application		☒ Average (55 °C) ☐ Low (35 °C)					
Applied standards		EN14825 / EN16147					
Rated heat output	Prated	14.0	kW	**Seasonal space heating energy efficiency**	η_s	134	%
Declared capacity for space heating at part load and at outdoor temperature Tj				*Declared coefficient of performance for space heating at part load and at outdoor temperature Tj*			
Tj = -7 °C	Pdh	12.5	kW	Tj = -7 °C	COPd	2.01	kW
Tj = +2 °C	Pdh	7.6	kW	Tj = +2 °C	COPd	3.29	kW
Tj = +7 °C	Pdh	4.9	kW	Tj = +7 °C	COPd	4.68	kW
Tj = +12 °C	Pdh	6.8	kW	Tj = +12 °C	COPd	6.51	kW
Tj = biv	Pdh	12.7	kW	Tj = biv	COPd	1.95	kW
Tj = TOL	Pdh	11.0	kW	Tj = TOL	COPd	1.95	kW
Tj = -15 °C (if TOL < -20 °C)	Pdh		kW	Tj = -15 °C (if TOL < -20 °C)	COPd		kW
Bivalent temperature	T_{biv}	-7.6	°C	Min. outdoor air temperature	TOL	-10	°C
Cycling interval capacity	Pcych		kW	Cycling interval efficiency	COPcyc		-
Degradation coefficient	Cdh	0.98	-	Max supply temperature	WTOL	58.0	°C
Power consumption in modes other than active mode				*Additional heat*			
Off mode	P_{OFF}	0.002	kW	Rated heat output	Psup	3.0	kW
Thermostat-off mode	P_{TO}	0.016	kW				
Standby mode	P_{SB}	0.015	kW	Type of energy input	Electric		
Crankcase heater mode	P_{CK}	0.035	kW				
Other items							
Capacity control	Variable			Rated airflow (air-water)		6,000	m^3/h
Sound power level, indoors/outdoors	L_{WA}	35 / 61	dB	Nominal heating medium flow		1.21	m^3/h
Annual energy consumption	Q_{HE}	8,431	kWh	Brine flow brine-water or water-water heat pumps			m^3/h
For heat pump combination heater							
Declared load profile for water heating	XL			**Water heating energy efficiency**	η_{wh}	98	%
Daily energy consumption	Q_{elec}	7.75	kWh	Daily fuel consumption	Q_{fuel}		kWh
Annual energy consumption	AEC	1,702	kWh	Annual fuel consumption	AFC		GJ

Electrical circuit diagram

F2040-8

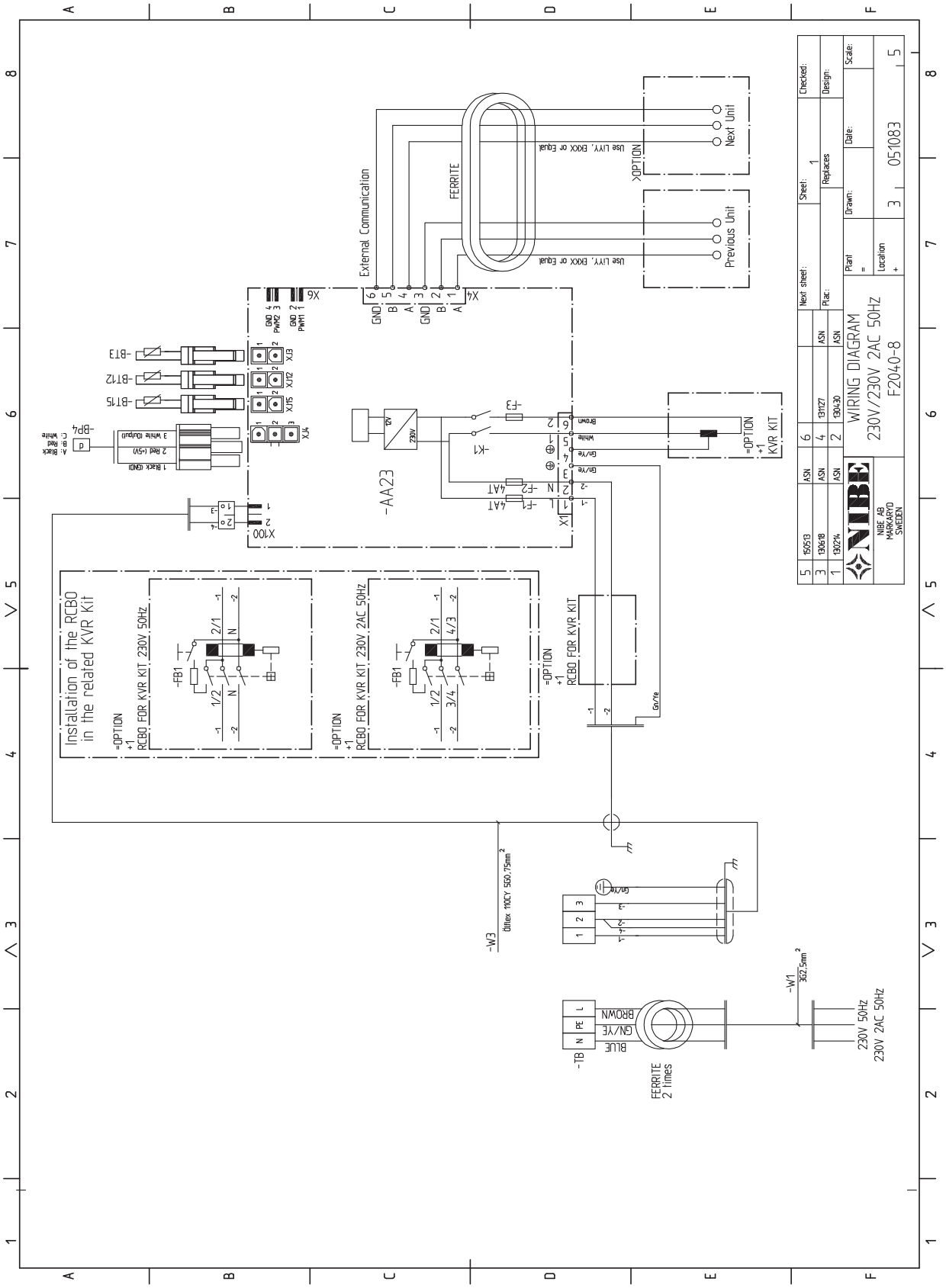

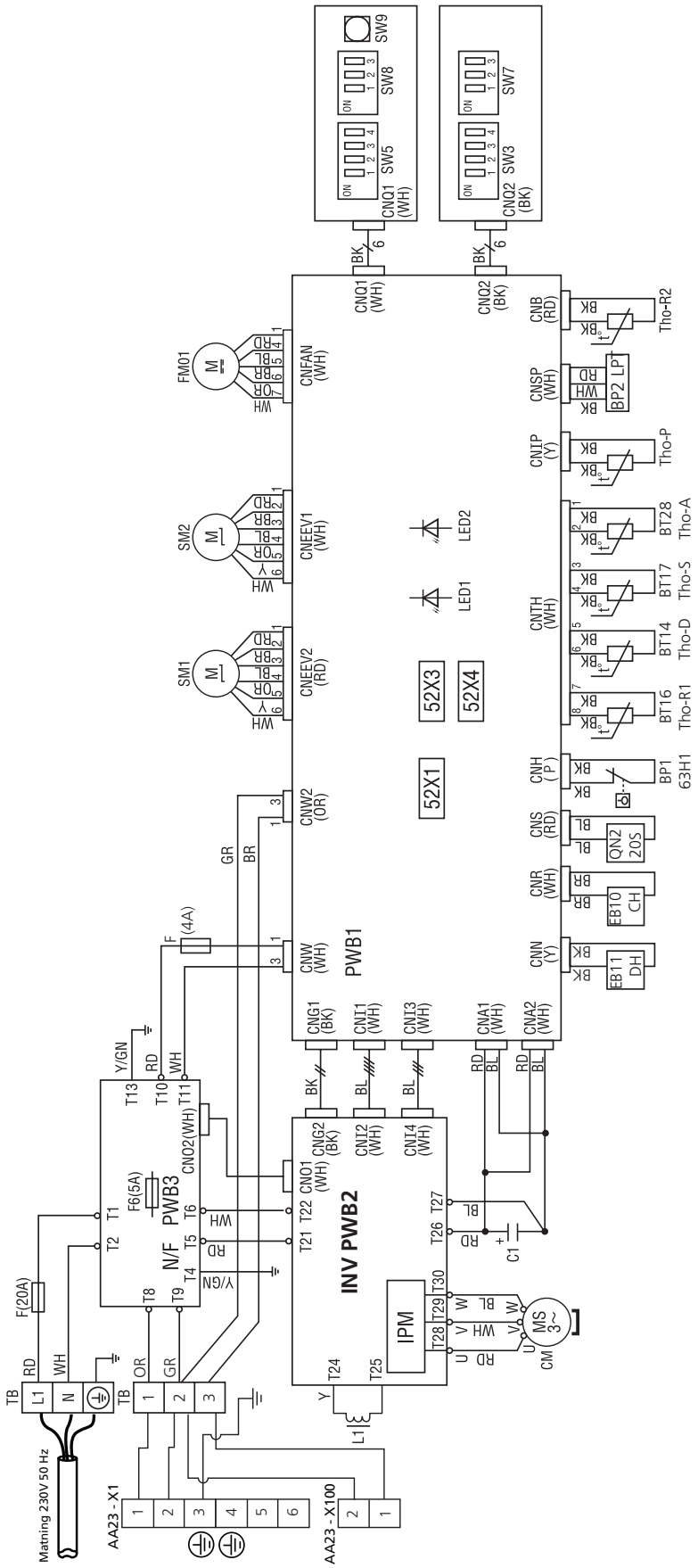

Matning 230V 50 Hz
AA23 - X1
AA23 - X100
TB
L1
N
F(20A)
F6(5A)
PWB3
N/F
T1
T2
T4
T5
T6
T8
T9
T10
T11
T13
CNO2(WH)
Y/GN
RD
WH
OR
GR
BR
F (4A)
INV PWB2
CNO1 (WH)
CNG2 (BK)
CNI2 (WH)
CNI4 (WH)
T21
T22
T24
T25
T26
T27
T28
T29
T30
IPM
MS 3~
CM
C1
L1
CNG1 (BK)
CNI1 (WH)
CNI3 (WH)
CNA1 (WH)
CNA2 (WH)
PWB1
CNW (WH)
CNW2 (OR)
CNEEV2 (RD)
CNEEV1 (WH)
CNFAN (WH)
SM1
SM2
FM01
52X1
52X3
52X4
LED1
LED2
CNN (Y)
CNR (WH)
CNS (RD)
CNH (P)
CNTH (WH)
CNIP (Y)
CNSP (WH)
CNB (RD)
EB11 DH
EB10 CH
QN2 20S
BP1 63H1
BT16 Tho-R1
BT14 Tho-D
BT17 Tho-S
BT28 Tho-A
Tho-P
BP2 LP
Tho-R2
CNQ1 (WH)
CNQ2 (BK)
SW5
SW8
SW9
SW3
SW7

F2040-12

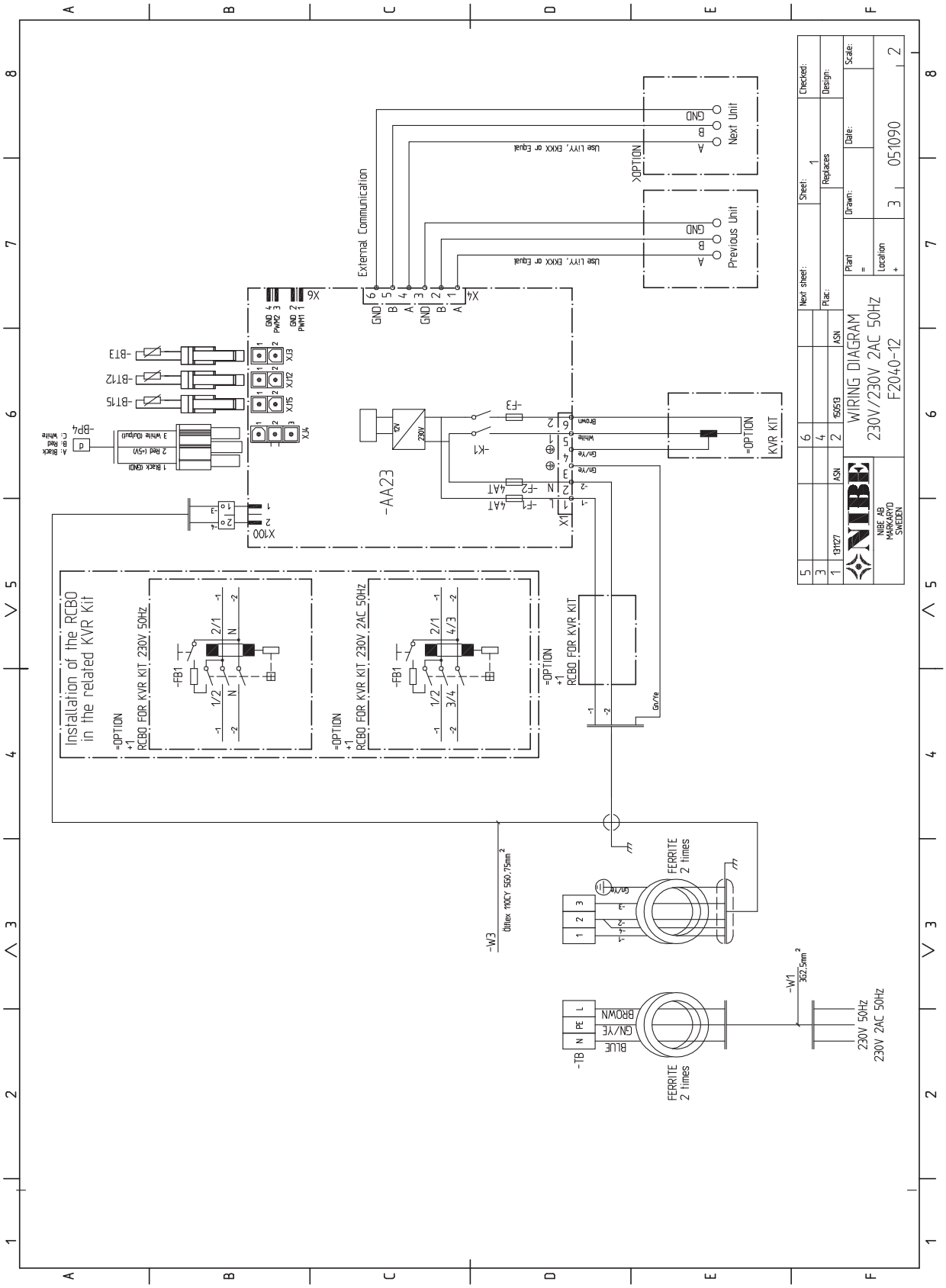

WIRING DIAGRAM
230V/230V 2AC 50Hz
F2040-12
NIBE AB
MARKARYD
SWEDEN
051090
External Communication
Next Unit
Previous Unit
Use LIYY, EKKX or Equal
KVR KIT
Installation of the RCBO
in the related KVR Kit
RCBO FOR KVR KIT 230V 50Hz
RCBO FOR KVR KIT 230V 2AC 50Hz
FERRITE
2 times
230V 50Hz
230V 2AC 50Hz

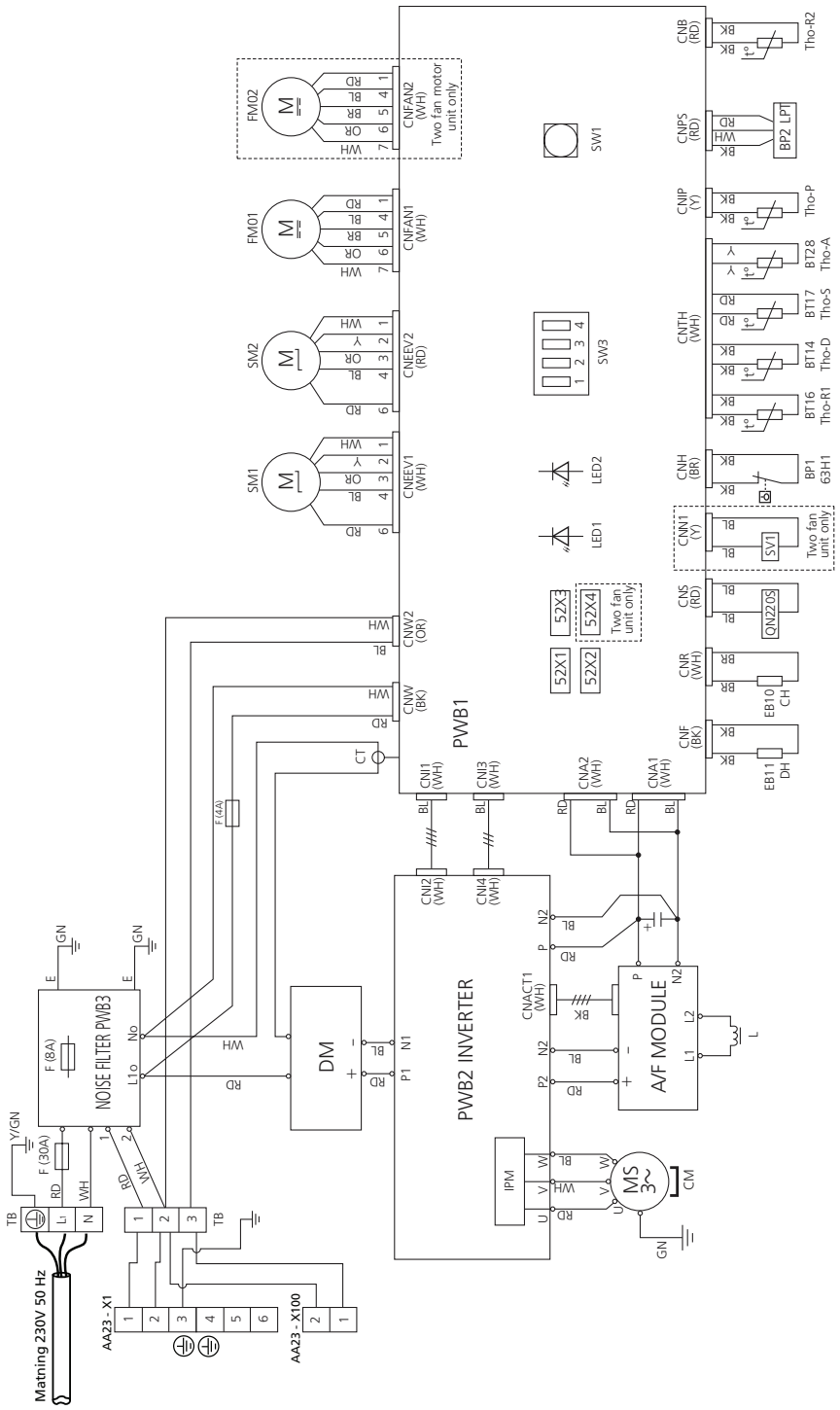
PWB1
PWB2 INVERTER
A/F MODULE
NOISE FILTER PWB3
DM
IPM
MS 3~
CM
SM1
SM2
FM01
FM02
CNEEV1 (WH)
CNEEV2 (RD)
CNFAN1 (WH)
CNFAN2 (WH)
Two fan motor unit only
CNW (BK)
CNW2 (OR)
CNI1 (WH)
CNI3 (WH)
CNA2 (WH)
CNA1 (WH)
CNI2 (WH)
CNI4 (WH)
CNACT1 (WH)
CNF (BK)
CNR (WH)
CNS (RD)
CNN1 (Y)
CNH (BR)
CNTH (WH)
CNIP (Y)
CNPS (RD)
CNB (RD)
SW1
SW3
LED1
LED2
52X1
52X2
52X3
52X4
Two fan unit only
Two fan unit only
BP1 63H1
BT16 Tho-R1
BT14 Tho-D
BT17 Tho-S
BT28 Tho-A
Tho-P
BP2 LPT
Tho-R2
EB11 DH
EB10 CH
QN220S
SV1
F (8A)
F (30A)
F (4A)
Matning 230V 50 Hz
AA23 - X1
AA23 - X100
TB
GN
Y/GN

F2040-16

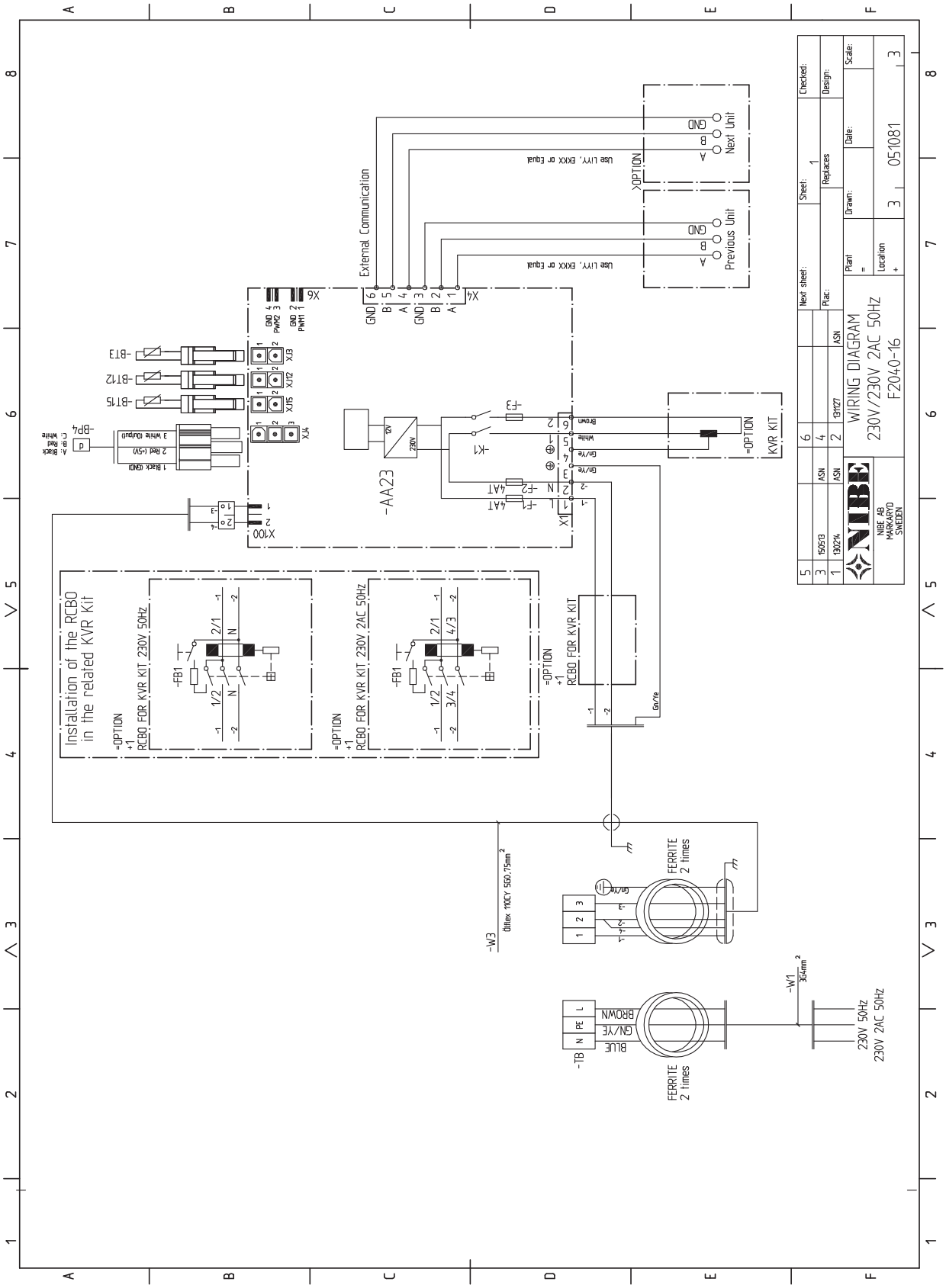
WIRING DIAGRAM
230V/230V 2AC 50HZ
F2040-16
051081
NIBE AB
MARKARYD
SWEDEN
External Communication
Next Unit
Previous Unit
Use LiYY, EKKX or Equal
Installation of the RCBO in the related KVR Kit
RCBO FOR KVR KIT 230V 50Hz
RCBO FOR KVR KIT 230V 2AC 50Hz
RCBO FOR KVR KIT
KVR KIT
FERRITE 2 times
230V 50Hz
230V 2AC 50Hz

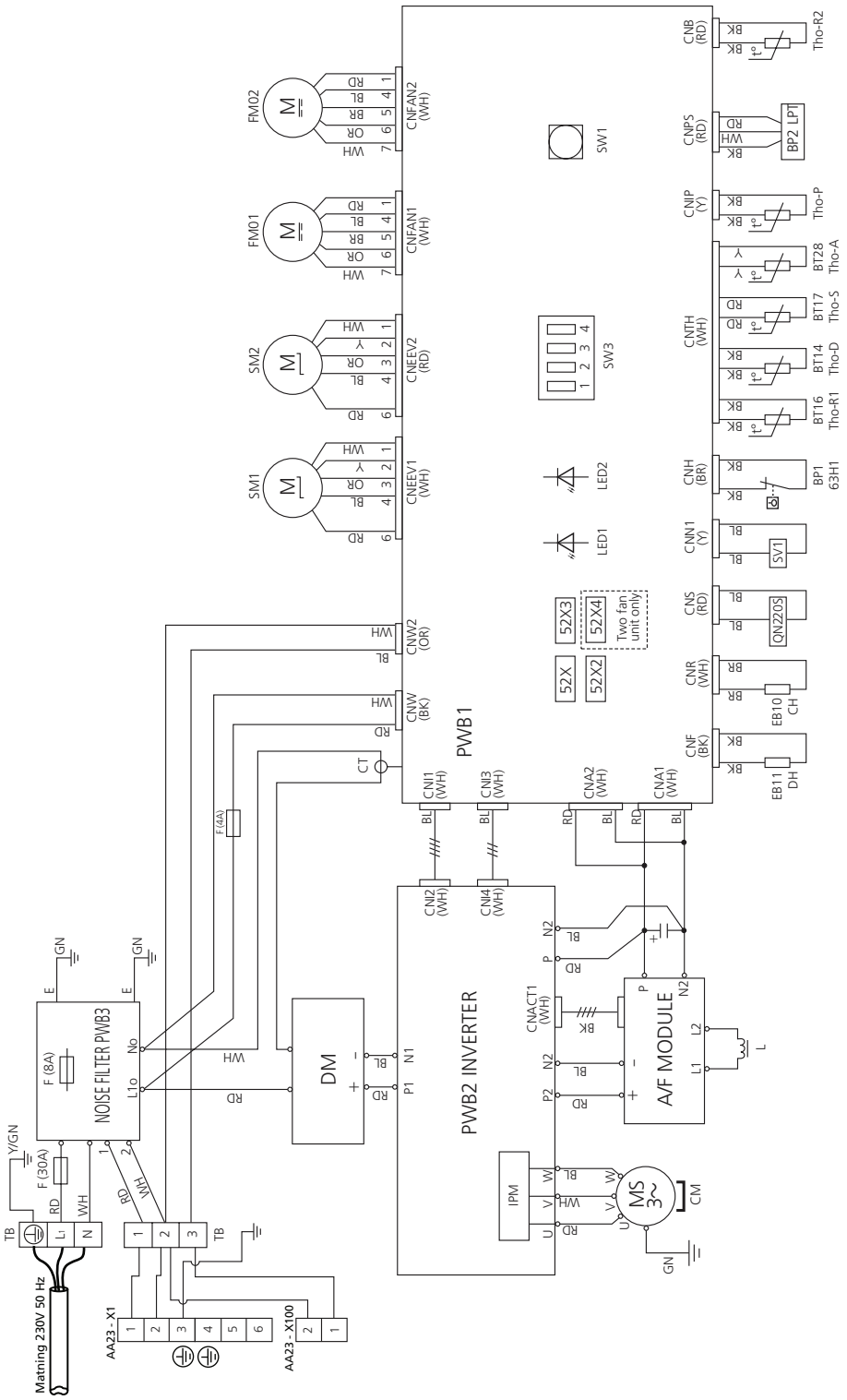
PWB1
PWB2 INVERTER
NOISE FILTER PWB3
A/F MODULE
DM
IPM
MS 3~
CM
F (8A)
F (30A)
F (4A)
Y/GN
GN
TB
Matning 230V 50 Hz
AA23 - X1
AA23 - X100
FM02
FM01
SM2
SM1
CNFAN2 (WH)
CNFAN1 (WH)
CNEEV2 (RD)
CNEEV1 (WH)
CNW2 (OR)
CNW (BK)
CT
CNI1 (WH)
CNI3 (WH)
CNI2 (WH)
CNI4 (WH)
CNA2 (WH)
CNA1 (WH)
CNACT1 (WH)
SW1
SW3
LED1
LED2
52X3
52X4
Two fan unit only
52X
52X2
CNB (RD)
CNPS (RD)
CNIP (Y)
CNTH (WH)
CNH (BR)
CNN1 (Y)
CNS (RD)
CNR (WH)
CNF (BK)
Tho-R2
BP2 LPT
Tho-P
BT28 Tho-A
BT17 Tho-S
BT14 Tho-D
BT16 Tho-R1
BP1 63H1
SV1
QN220S
EB10 CH
EB11 DH

12 Item register

Item register

A
Accessories, 42
Addressing via multi-heat pump operation, 29
Adjustment, charge flow, 33
Alarm list, 39
Ambient temperature sensor, 29
Assembly, 6

C
Commissioning and adjusting, 30
  Adjustment, charge flow, 33
  Compressor heater, 30
  Filling and venting the heating medium system, 30
  Preparations, 30
  Readjusting, heating medium side, 32
  Start-up and inspection, 31
Communication, 29
Compressor heater, 30
Connecting accessories, 21
Connections, 24
Contact information, 5

D
Delivery and handling, 6
  Assembly, 6
  Installation area, 8
  Removing the covers, 9
  Removing the front panel, 9
  Removing the side panel, 10
  Supplied components, 8
  Transport and storage, 6
Dimensions and setting-out coordinates, 44
Disturbances in comfort, 35
  Troubleshooting, 35
Docking alternatives, 21

E
Electrical circuit diagram, 58
Electrical connection, 16
Electrical connections, 22
  Addressing via multi-heat pump operation, 29
  Ambient temperature sensor, 29
  Communication, 29
  Connecting accessories, 21
  Connections, 24
  External heating cable (KVR 10), 28
  General, 22
  Power connection to rear side (standard) or underneath (alternative), 24
Energy labelling, 54
  Data for energy efficiency of the package, 54
  Information sheet, 54
  Technical documentation, 55
External heating cable (KVR 10), 28

F
Filling and venting the heating medium system, 30

I
Important information, 2
  Safety information, 2
Inspection of the installation, 4
Installation area, 8

M
Marking, 2

P
Pipe connections, 19
  Docking alternatives, 21
  General, 19
  Pipe coupling heating medium circuit, 19
  Water volumes, 19
Pipe coupling heating medium circuit, 19
Power connection to rear side (standard) or underneath (alternative), 24
Preparations, 30

R
Readjusting, heating medium side, 32
Removing the covers, 9
Removing the front panel, 9
Removing the side panel, 10

S
Safety information, 2
  Contact information, 5
  Inspection of the installation, 4
  Marking, 2
  Serial number, 2
  Symbols, 2
Sensor placement, 36
Serial number, 2
Sound pressure levels, 46
Start-up and inspection, 31
Supplied components, 8
Symbols, 2

T
Technical data, 44
  Dimensions and setting-out coordinates, 44
  Electrical circuit diagram, 58
  Sound pressure levels, 46
  Technical Data, 47
Technical Data, 47
The heat pump design, 11
  Component locations, 11
  Electrical components, 16
  Electrical connection, 16
  List of components, 11
Transport and storage, 6
Troubleshooting, 35
  Sensor placement, 36

SE

Återvinning

Lämna avfallshanteringen av emballaget till den installatör som installerade produkten eller till särskilda avfallsstationer.

När produkten är uttjänt får den inte slängas bland vanligt hushållsavfall. Den ska lämnas in till särskilda avfallsstationer eller till återförsäljare som tillhandahåller denna typ av service.

Felaktig avfallshantering av produkten från användarens sida gör att administrativa påföljder tillämpas i enlighet med gällande lagstiftning.

GB

Recovery

Leave the disposal of the packaging to the installer who installed the product or to special waste stations.

Do not dispose of used products with normal household waste. It must be disposed of at a special waste station or dealer who provides this type of service.

Improper disposal of the product by the user results in administrative penalties in accordance with current legislation.

DE

Recycling

Übergeben Sie den Verpackungsabfall dem Installateur, der das Produkt installiert hat, oder bringen Sie ihn zu den entsprechenden Abfallstationen.

Wenn das Produkt das Ende seiner Lebensdauer erreicht hat, darf es nicht über den normalen Hausmüll entsorgt werden. Stattdessen muss es bei speziellen Entsorgungseinrichtungen oder Händlern abgegeben werden, die diese Dienstleistung anbieten.

Eine unsachgemäße Entsorgung des Produkts durch den Benutzer zieht Verwaltungsstrafen gemäß geltendem Recht nach sich.

NIBE AB Sweden
Hannabadsvägen 5
Box 14
SE-285 21 Markaryd
info@nibe.se
www.nibe.eu

231844